Totem RoboCar Chassis. Building instructions.

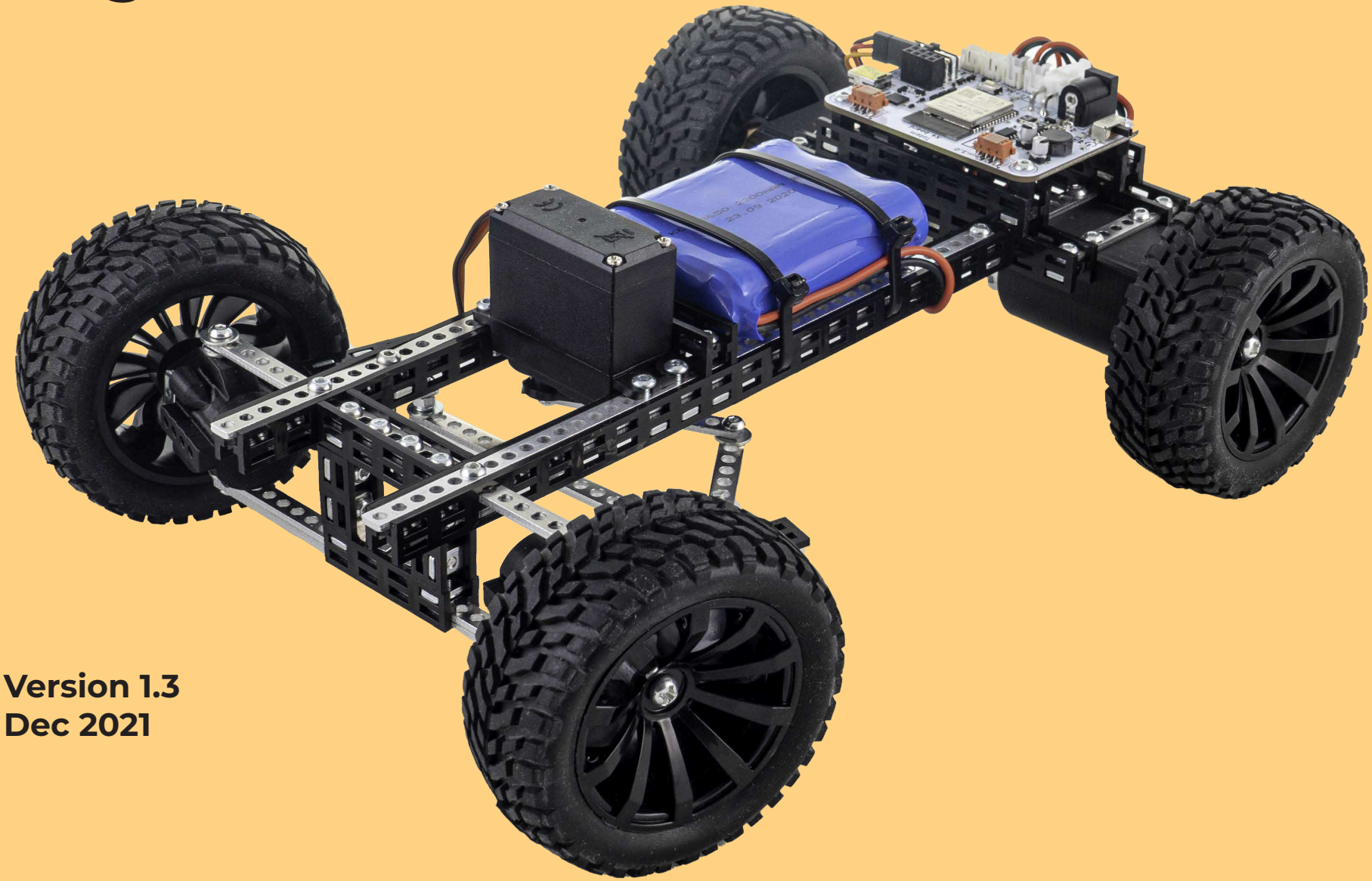

Version 1.3
Dec 2021

totem

Starting tips.

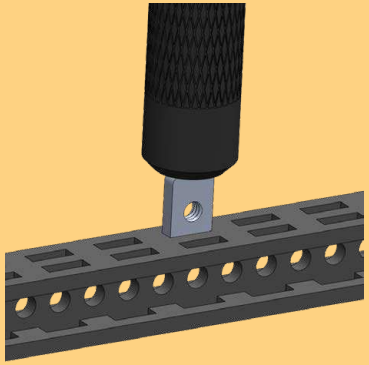

Use the back of the screwdriver to push the nuts into the slots.

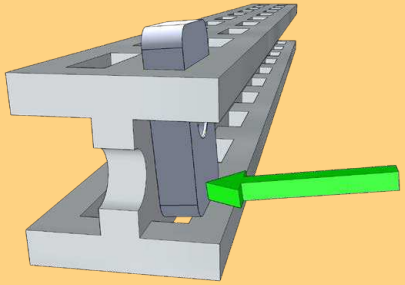

After entering the nut, it sometimes is stuck at the next slot. Use your thumb to push it straight, then continue to push it through.

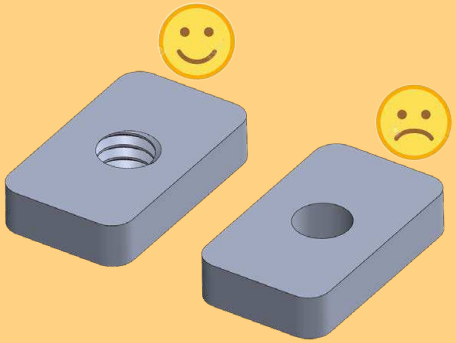

Some of the nuts (~1%) are missing threads. This is a manufacturing issue. We are trying to minimize the fault. In the mean time, we supply extra nuts in your kit.
We apologize for the in-convenience.

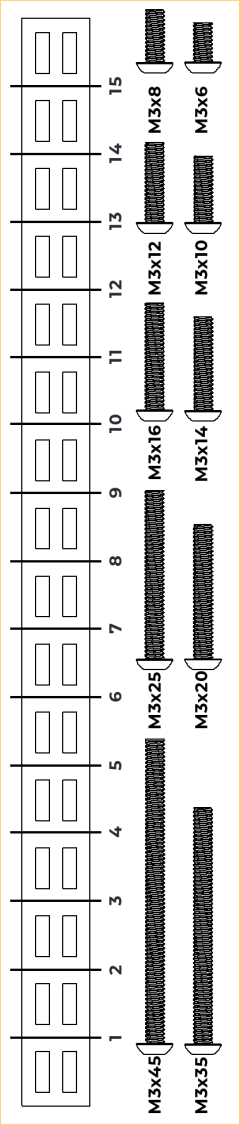

Use Beam/Bolt ruler to help you find the right lengths of the bolts and beams.

For more tips, please go to the link below:
https://totemmaker/blog/totem-mechanics-for-beginners/

totem

v1.3

BEFORE YOU START BUILDING:

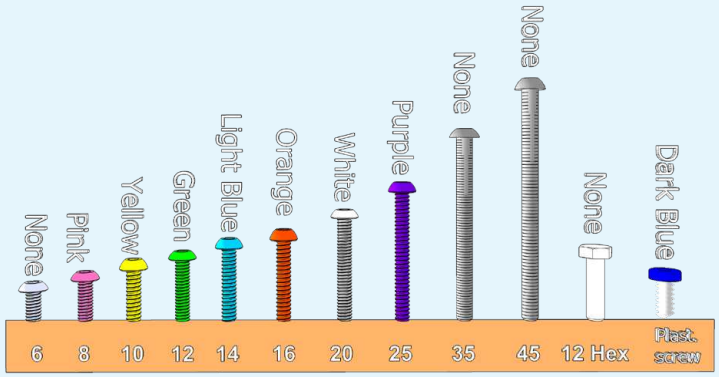

Bolt colours codes:

We have put some colours on bolts to make instructions more clear.

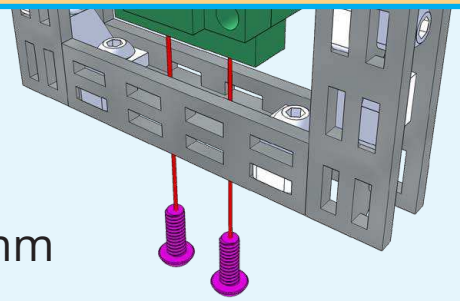

NOTE: 2x 8mm

Notes for bolts <u>other than</u> 6mm:

When bolts that are <u>not</u> 6mm will be used, in addition to colours, extra notes are given in the instructions with lengths in mm.

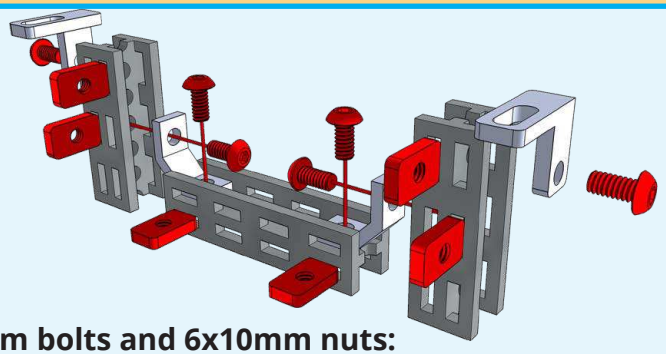

6mm bolts and 6x10mm nuts:

When starting on a building step, the 6mm bolts and 6x10 nuts are coloured RED. It makes it easier to see where the new bolts and nuts are placed.

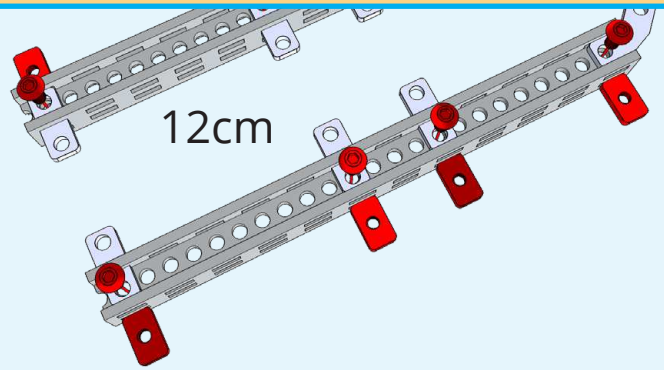

I-beams lengths.

When a new Totem beam is needed in a step, the length is indicated.

totem

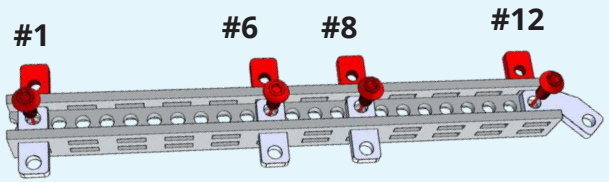

Positions for nuts with #-symbol.

When it is helpful, the slot-number is indicated in the Totem beam. Starting from #1 and counting slots.

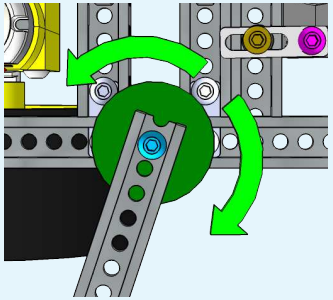

Don't tighten link too much.

Green Rotating Arrows = rotating action.

When a connection is a rotating hub, you must not tighten the bolt and nut too much. Test it for a smooth rotation, but not too wobbly either.

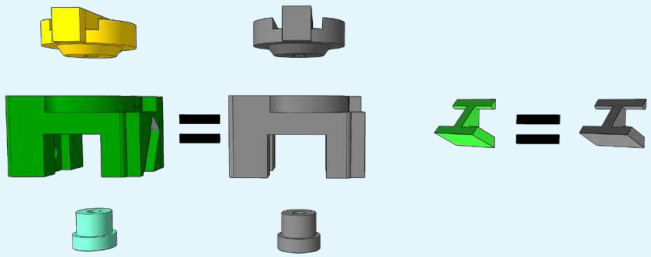

The colour of parts.

The colours of plastic part may vary. Colours are often changed on parts to make it easier to see them in the instructions pictures.

Totem Wrench Socket

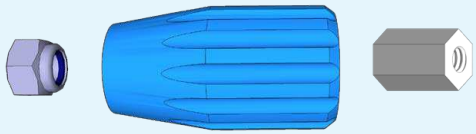

Helpful little tool:

Included in the kit is a small hex-socket used for fastening Lock Nuts and Nylon Towers. The pointy end is for Lock Nuts.

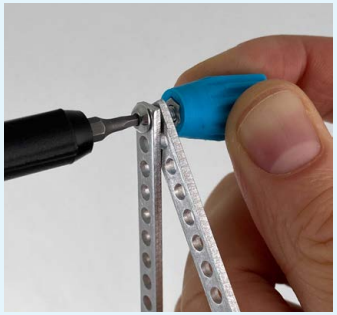

totem

v1.3

Totem RoboCar Chassis Parts.

47x

Bolt M3x6

10x

Bolt M3x8

13x

Bolt M3x10

4x

Bolt M3x12

6x
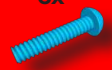
Bolt M3x14

4x

Bolt M3x16

38x

Nut M3 6x10

6x

Nut M3 5.5x5.5

7x

Lock Nut M3

2x
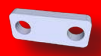
2-hole Simple

6x

C-Bracket

1x

2 hole 90 deg

1x

L-Twist

1x

L-Twist mirror

11x

Metal washer M3 9x0.8mm

4x

Threaded spacer M3x8mm

1x

servo motor with strip arm

2x

18mm Wheel Barrel

2x

12mm Bearing Axle

2x

12mm Wheel Coupler 3D

4x

Bearing 12x4x-18mm

2x

25mm Motor Bracket

2x

25mm DC-motor geared

2x

Lock Nut M4

2x

4mm shaft to HEX 12mm wheel coupler

4x

M4 Set-screw

4x

77mm Wheel

4x

Bolt M4x10 for wheel

6x

10cm ZIP TIE

2x

20cm ZIP TIE

STRIP BRACKETS:

4cm/8H	1x

5cm/10H	2x

10.5cm/21H	1 x

12.5cm/25H	3 x

20cm/40H	4x

Totem Beams:

2 cm	4 x
3 cm	2 x
4 cm	3 x
6 cm	1 x
7 cm	2 x
10 cm	2 x
20 cm	2 x

Tools:

1x

Totem Screw Driver

1x

Totem Wrench Socket

X4 Totem Robotics controller with battery and charger.

totem

v1.3

PART 1

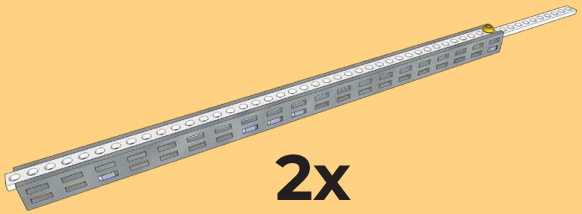

2x

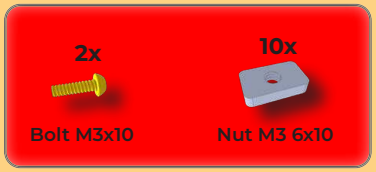

20 cm	2x

20cm/40H	4x

20 cm	2x

1

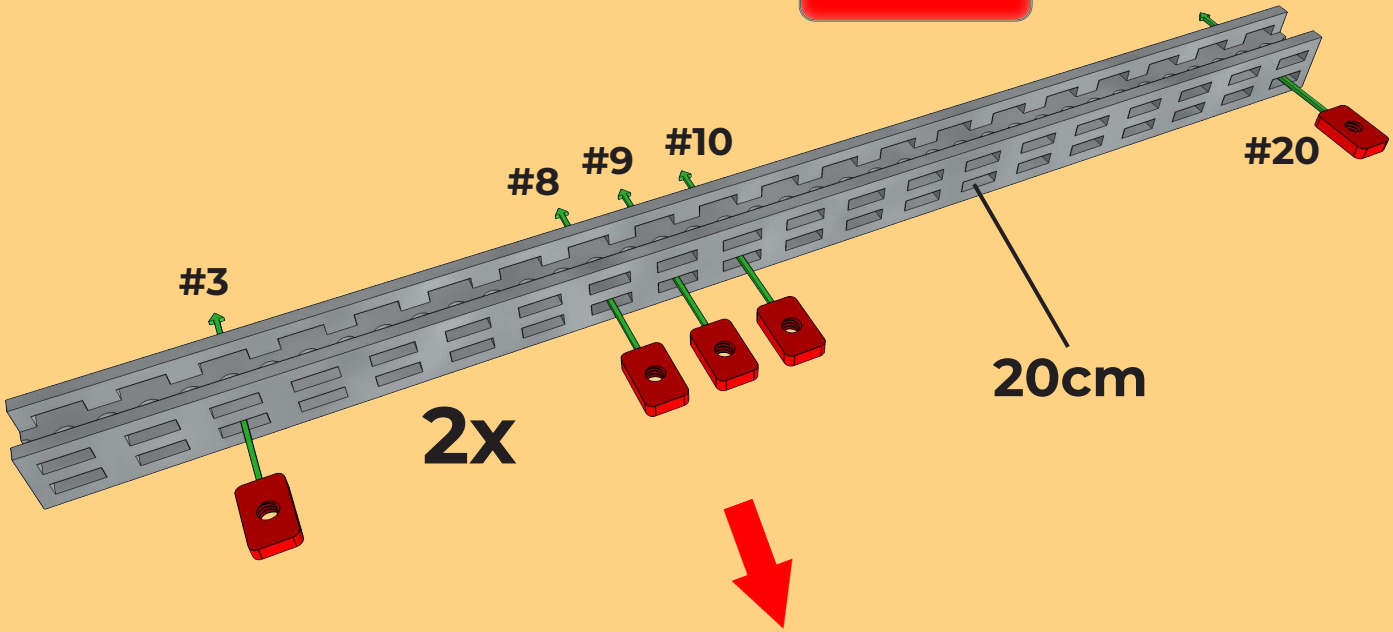

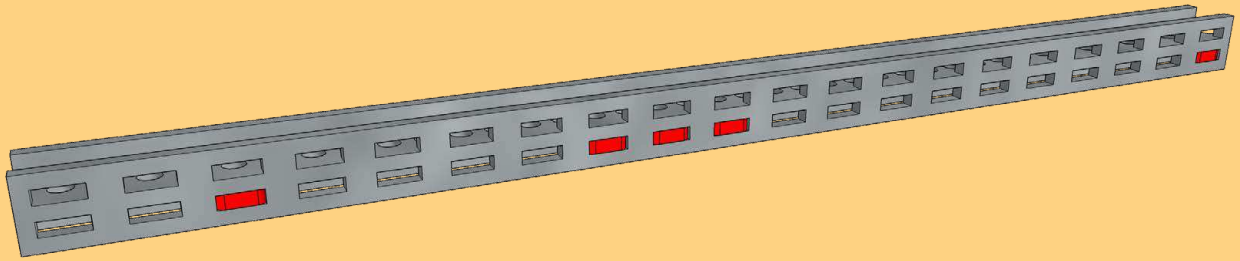

2x

totem

v1.3

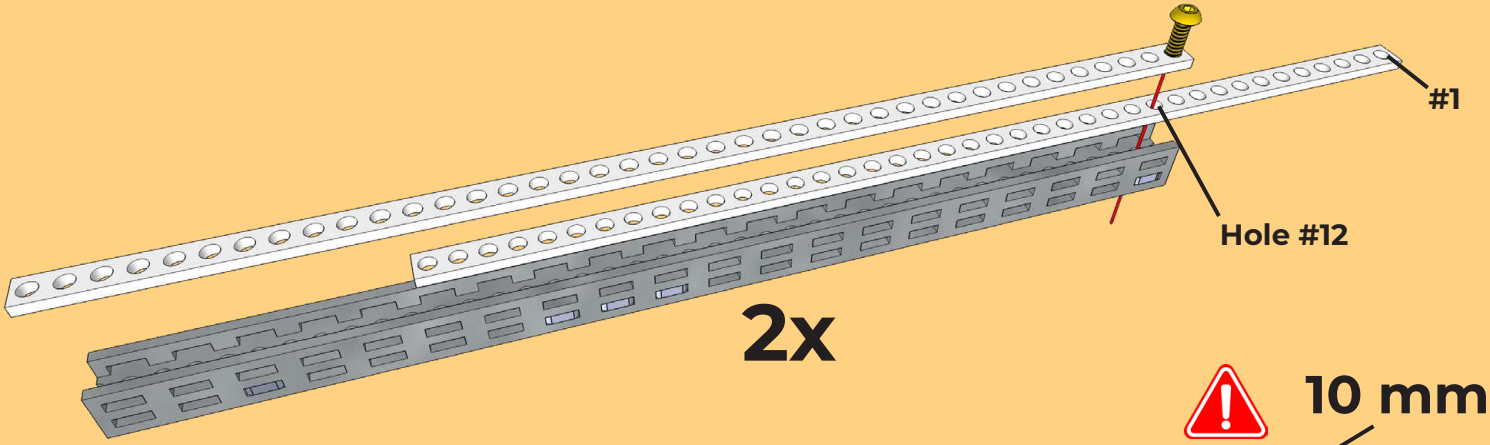

2

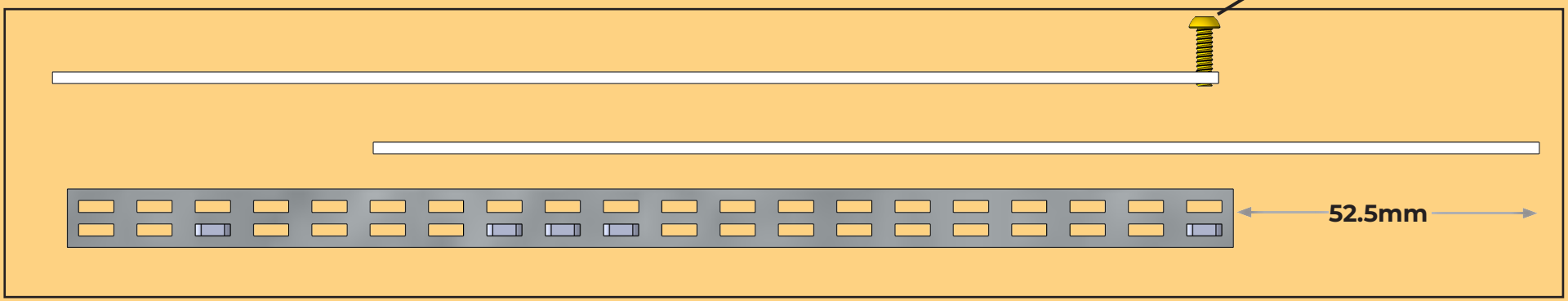

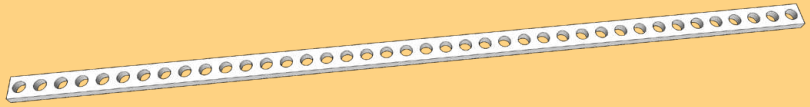

20cm/40H	4x

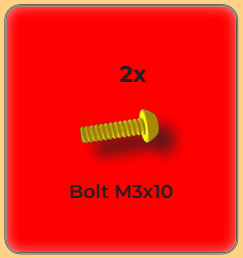

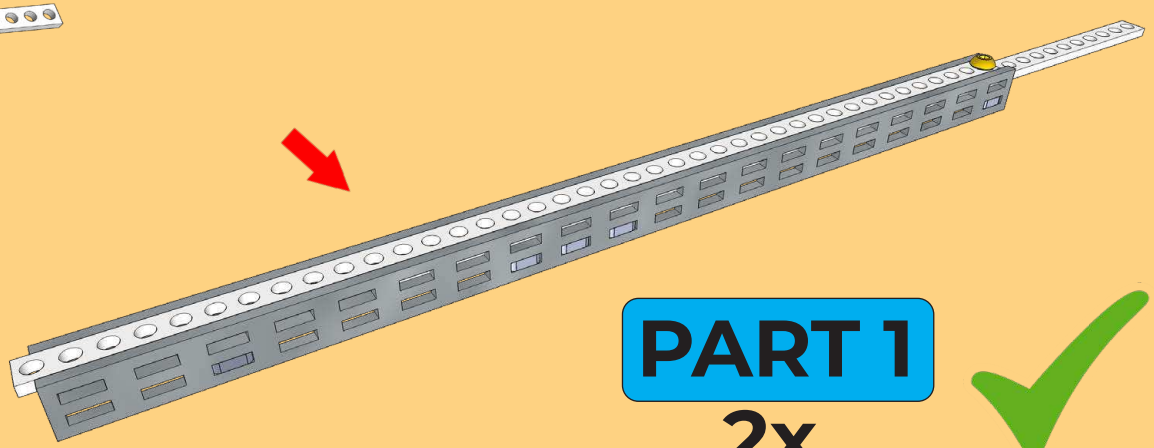

PART 1

2x

totem

v1.3

PART 2

1

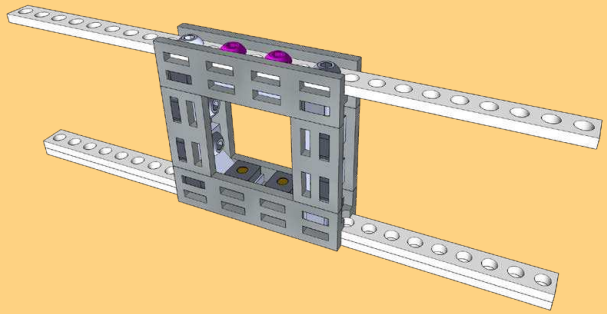

6x	2x	4x
Bolt M3x6	Bolt M3x8	Bolt M3x10

8x	4x	4x
Nut M3 6x10	Nut M3 5.5x5.5	C-Bracket

12.5cm/25H	3x

2 cm	2x
4 cm	2x

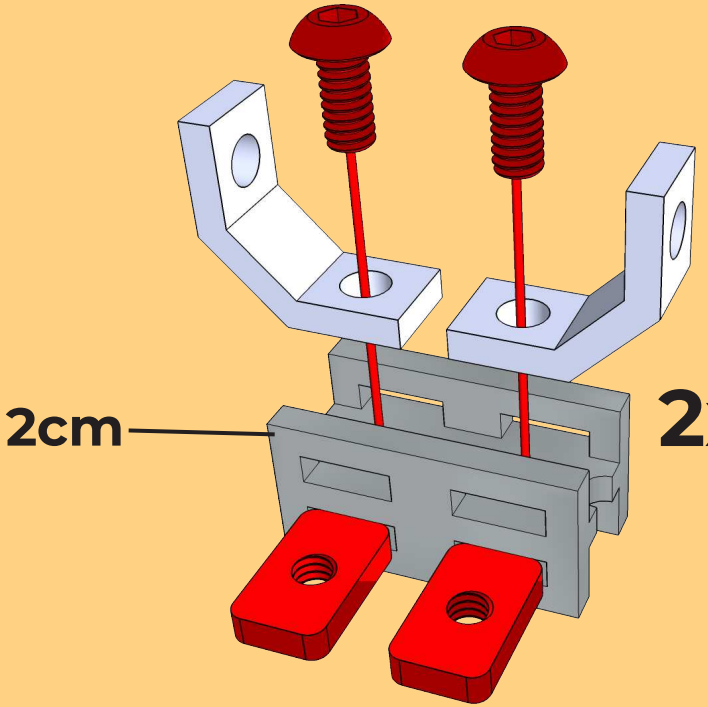

2 cm	2x

4x
Bolt M3x6
4x
Nut M3 6x10
4x
C-Bracket

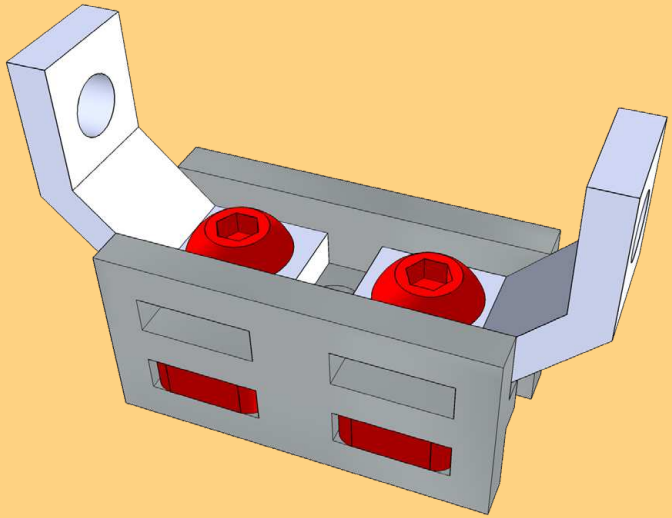

totem

v1.3

2

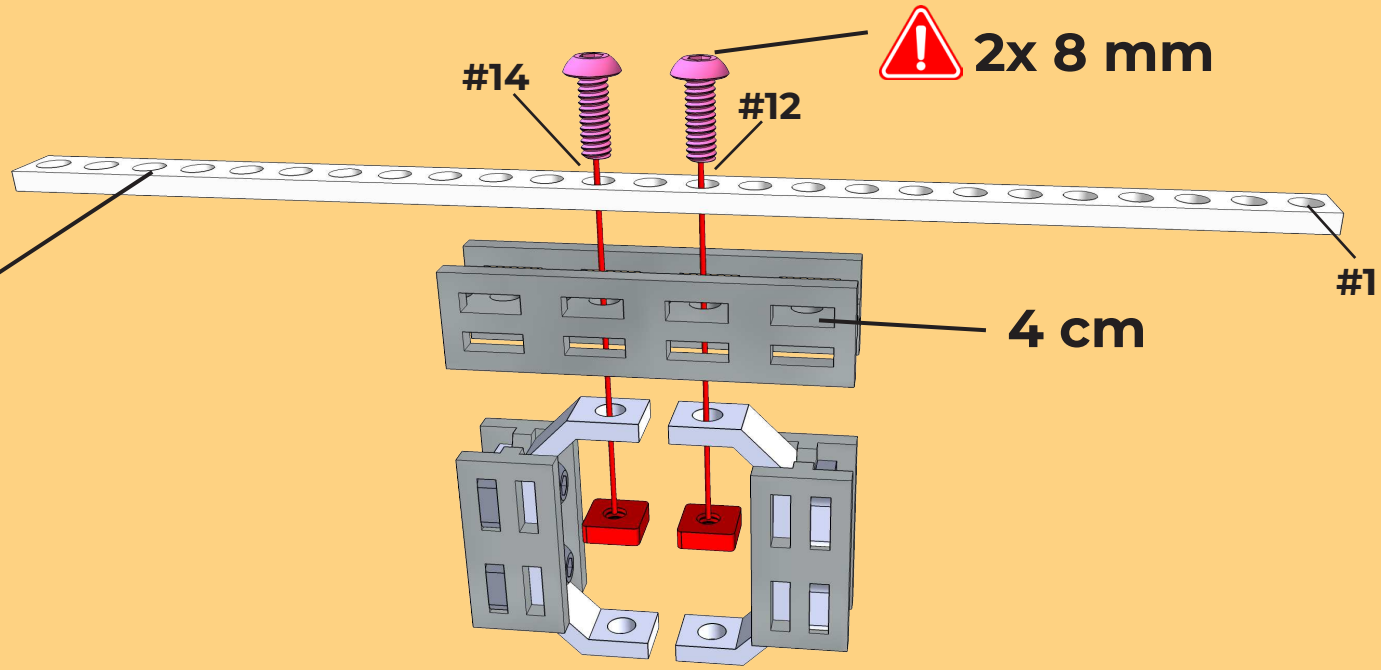

12.5cm/25H	1x

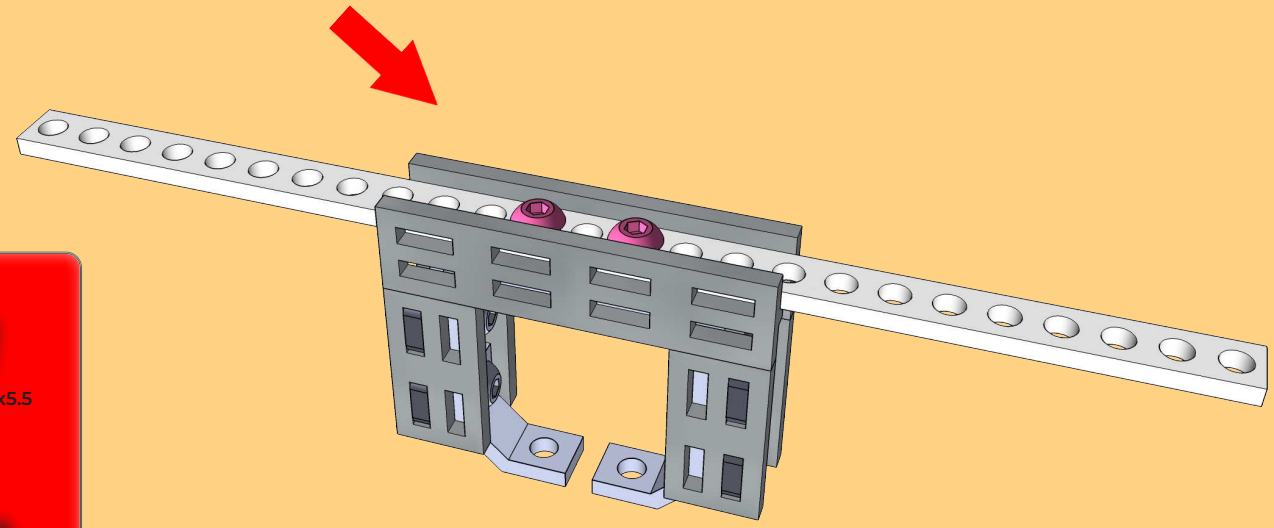

4 cm	1x

totem

v1.3

3

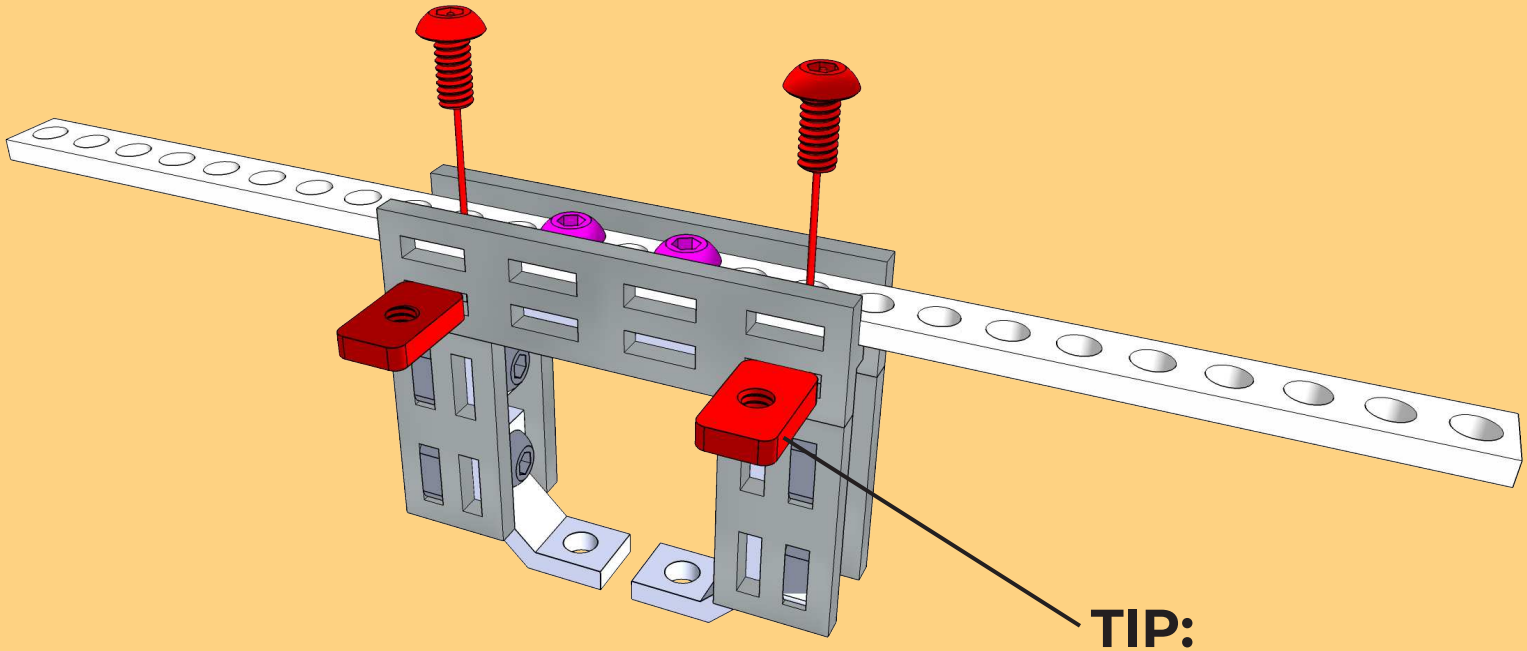

TIP:
Put the 2 nuts into beam first.

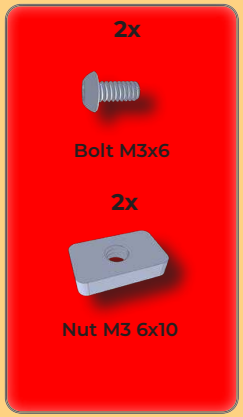

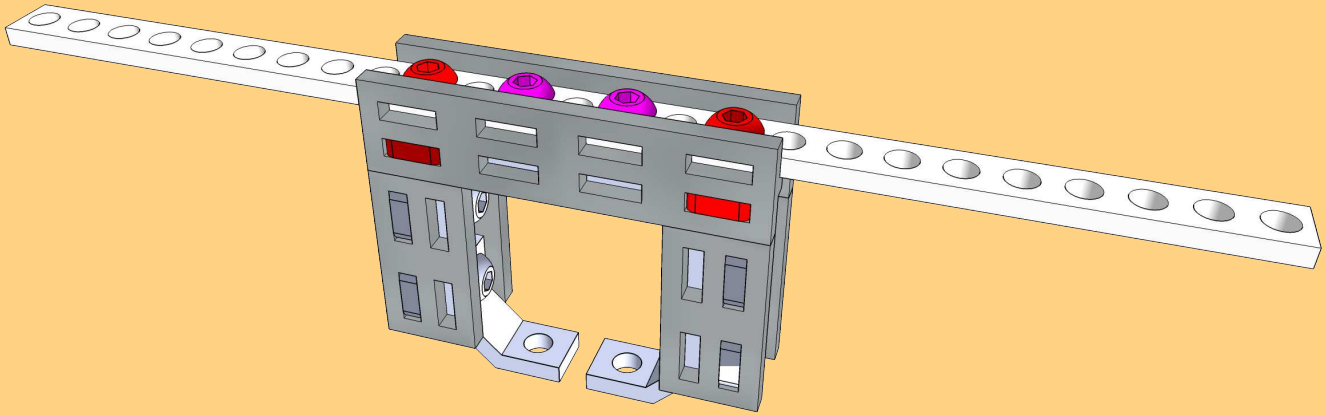

totem

v1.3

TIP:
Fix the 4cm beam first with the 2x 5.5x5.5 nuts.

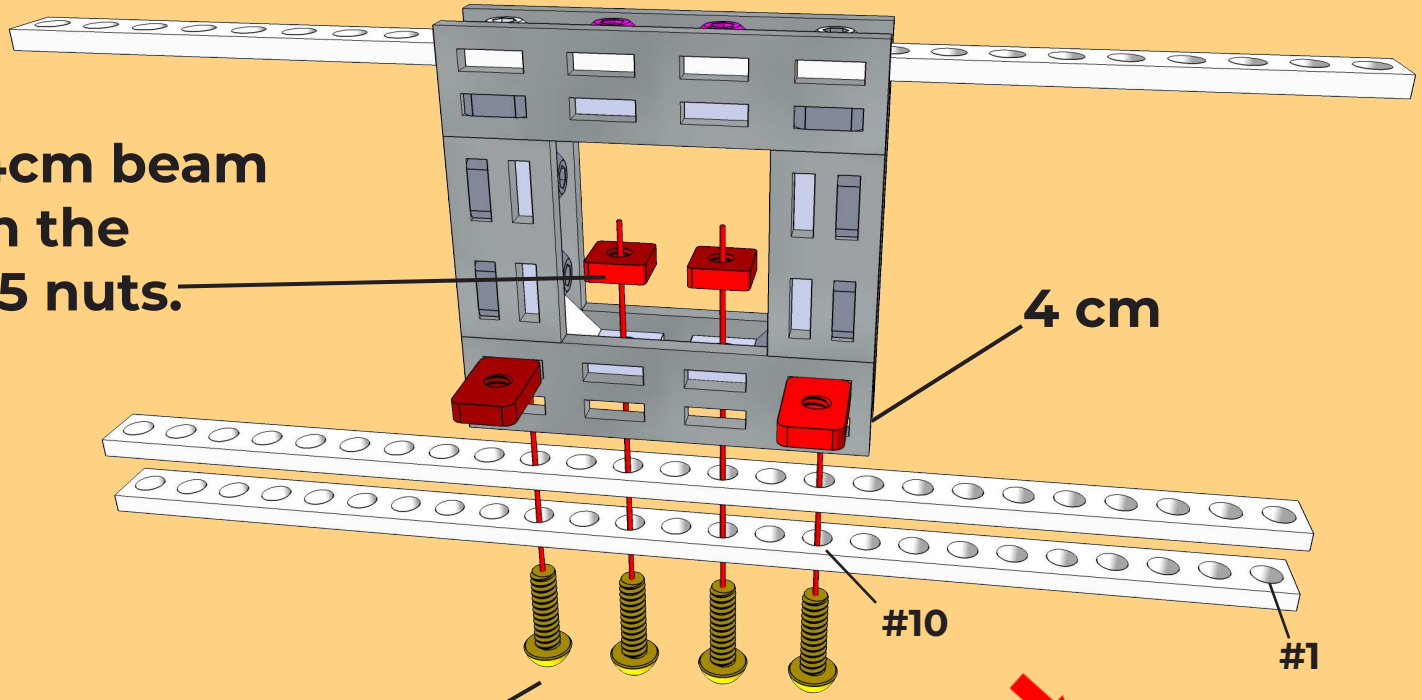

4 cm	1x

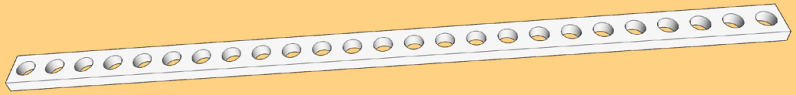

12.5cm/25H	2x

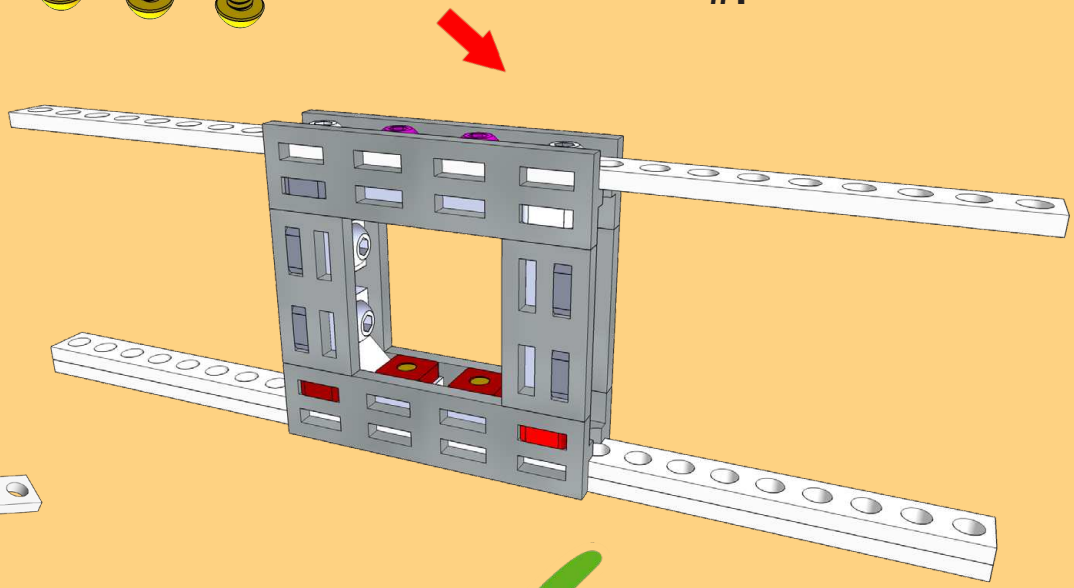

PART 2

totem

v1.3

PART 3

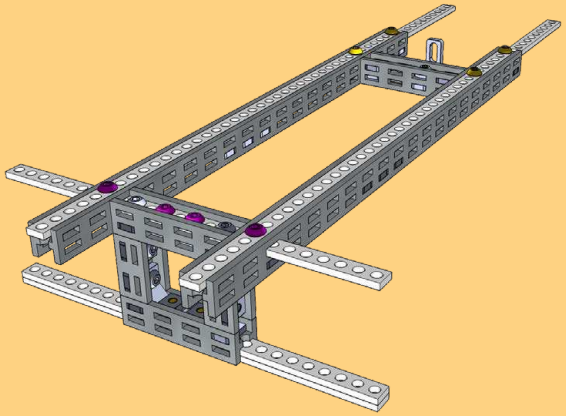

3x	2x	2x	2x
Bolt M3x6	Bolt M3x8	Bolt M3x10	Nut M3 5.5x5.5

3x	1x	2x
Nut M3 6x10	2 hole 90 deg	2-hole Simple

4 cm	1x

totem

1

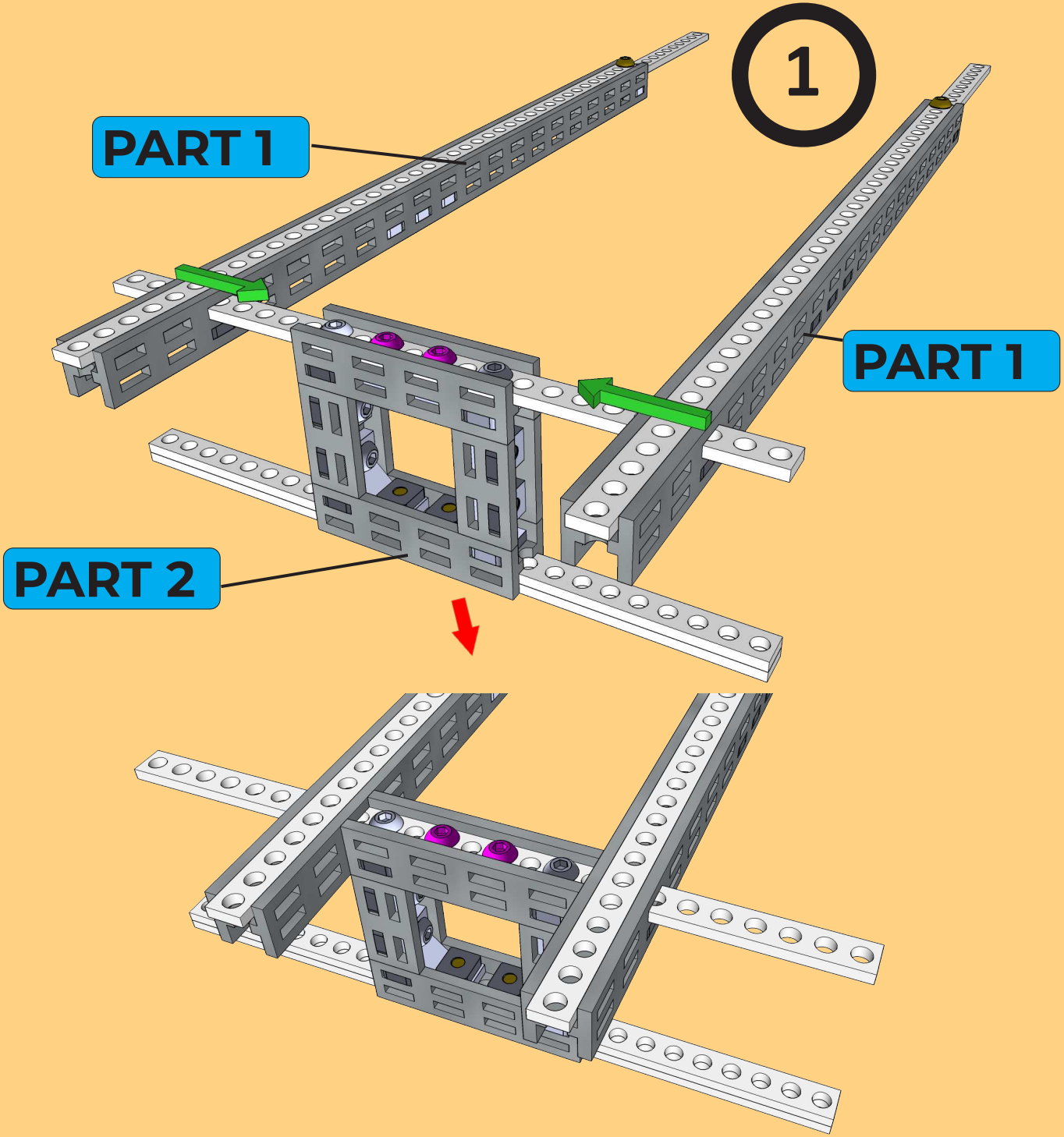

v1.3

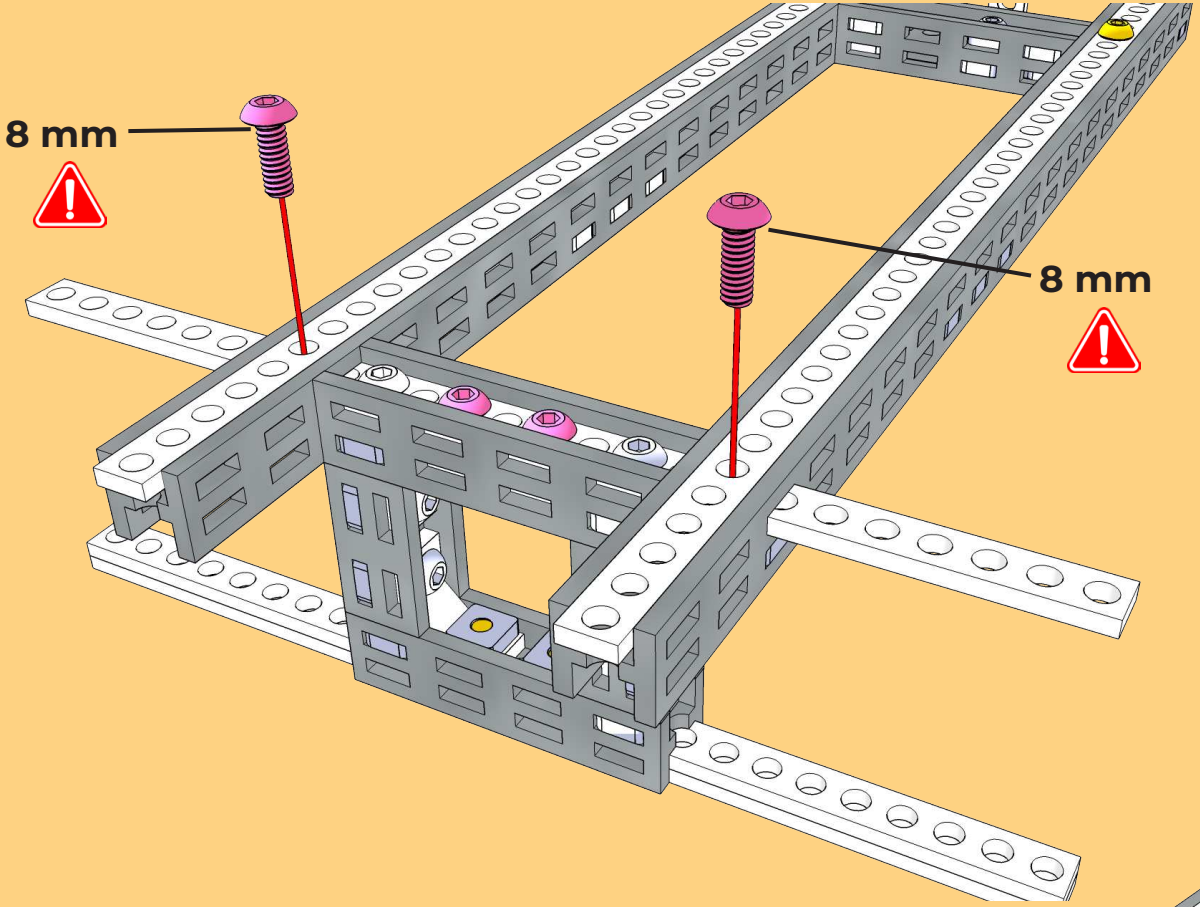

2

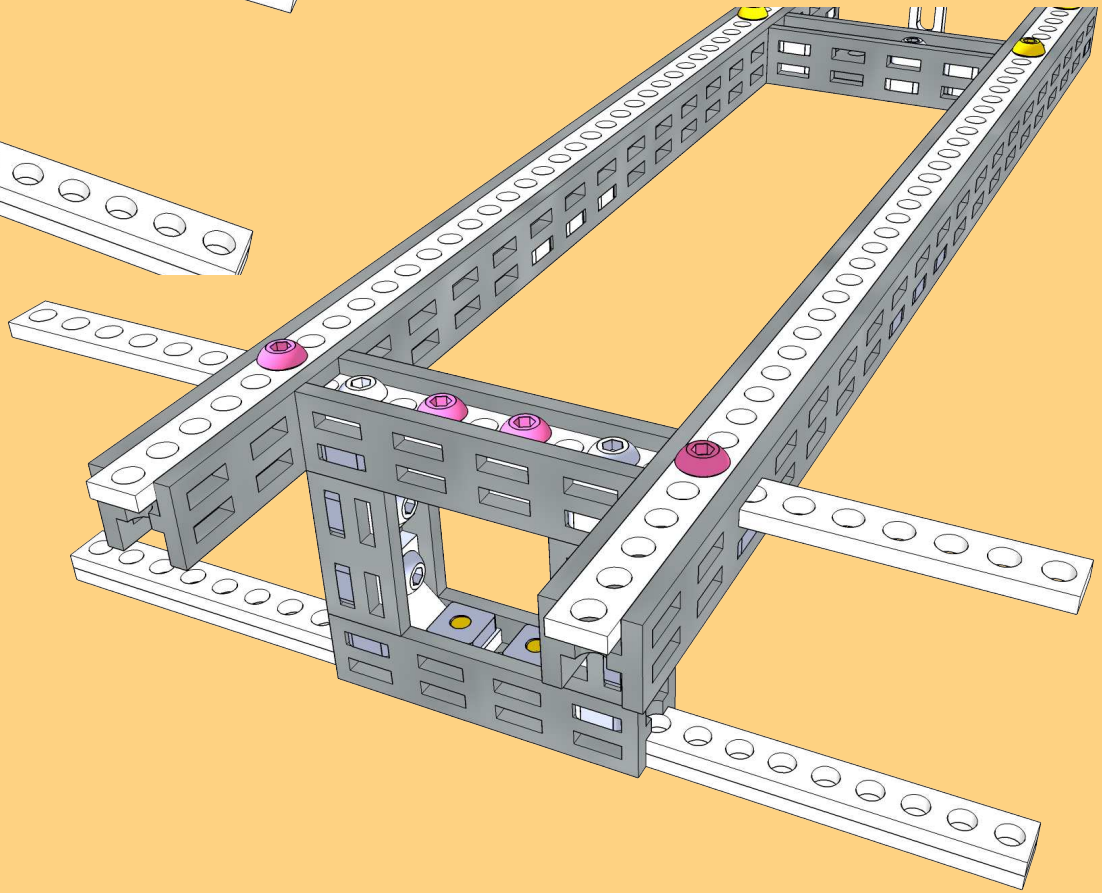

totem

v1.3

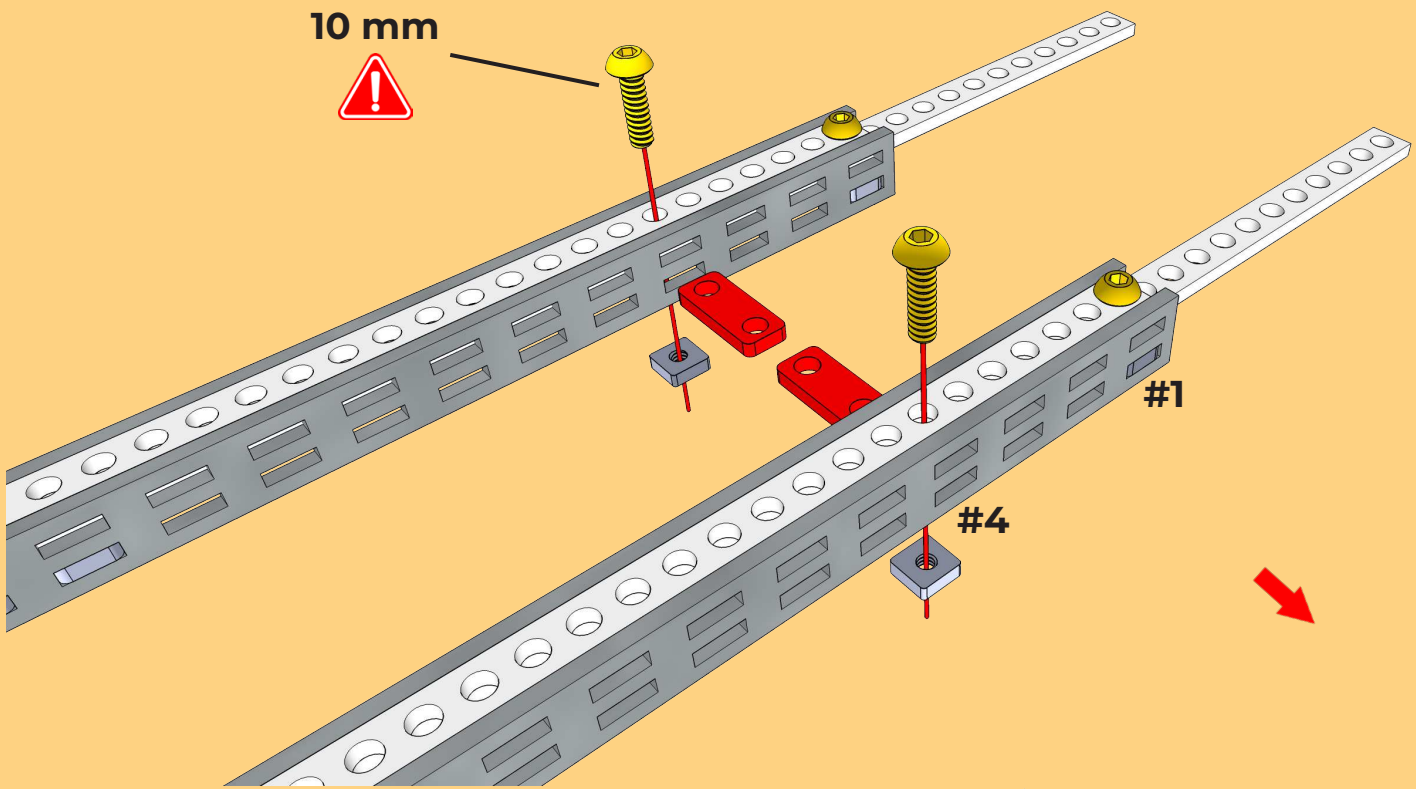

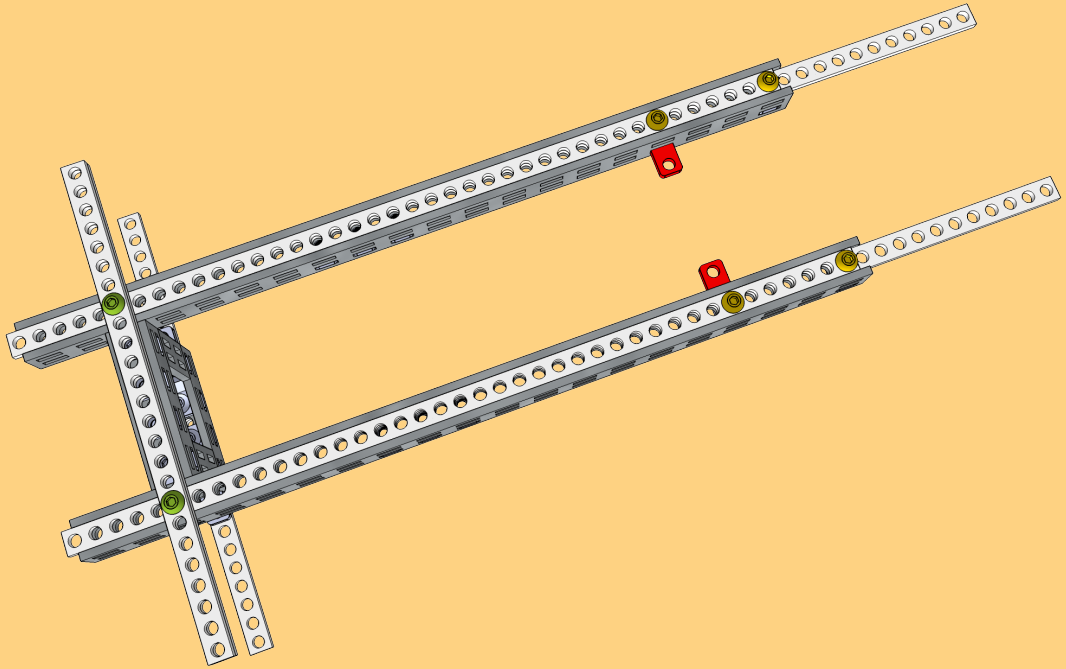

totem

v1.3

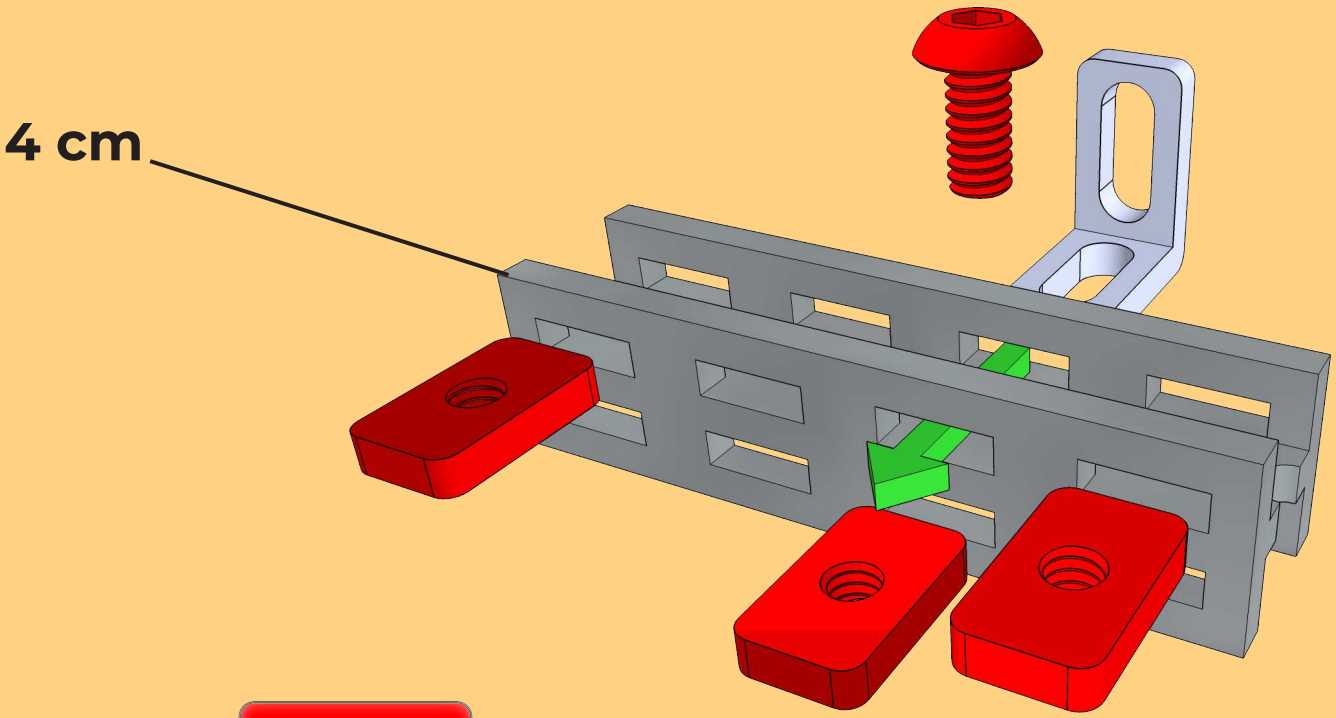

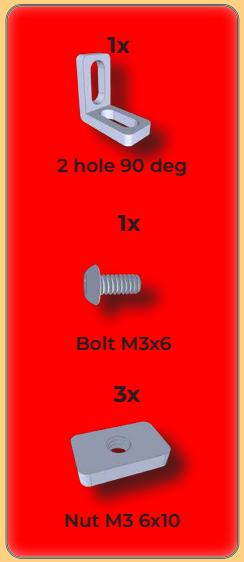

4 cm	1x

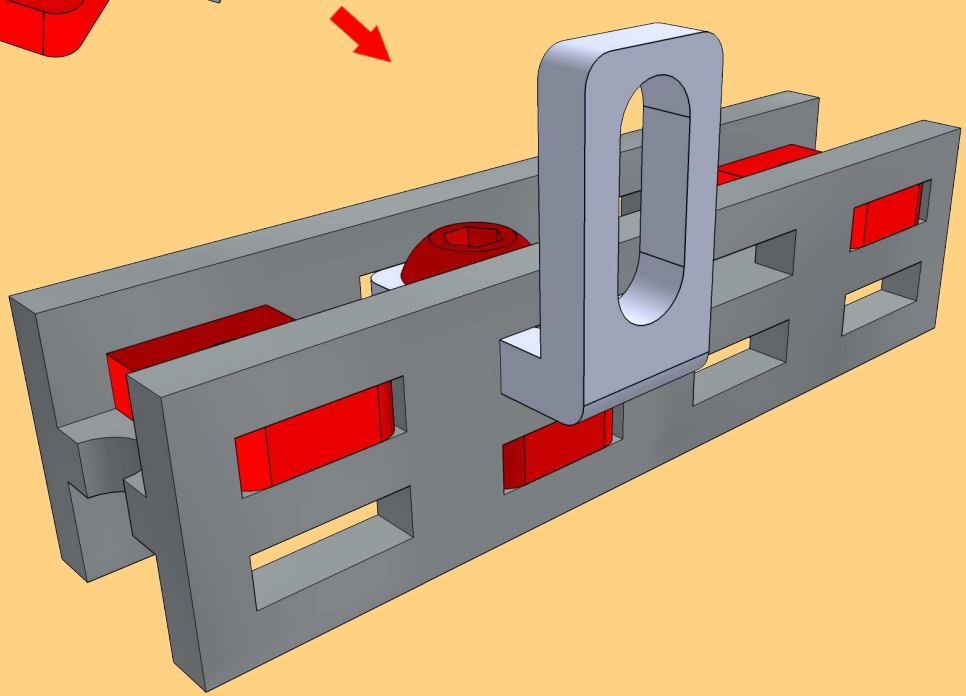

totem

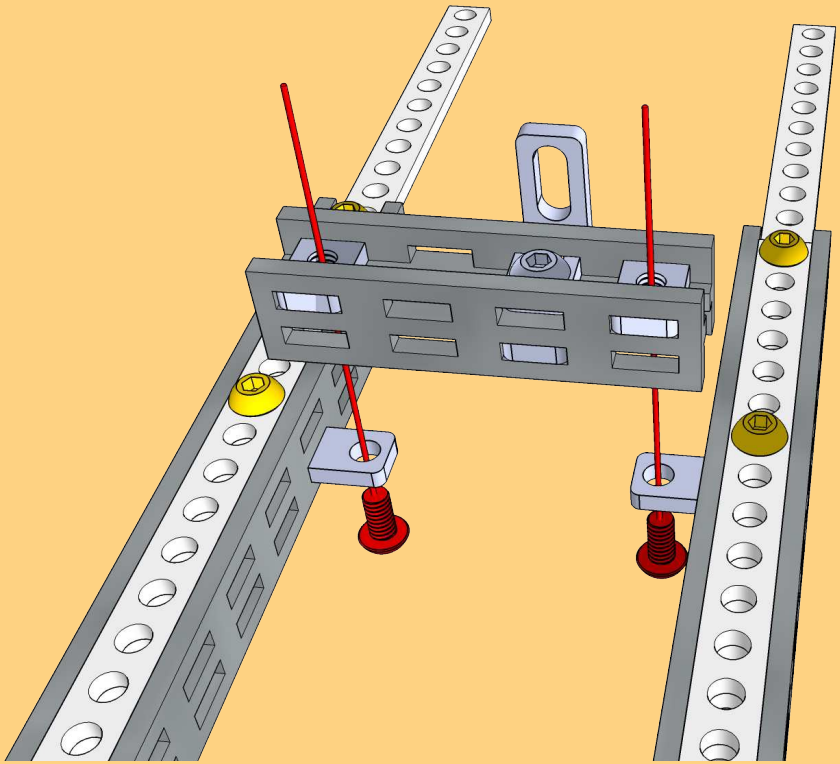

PART 3

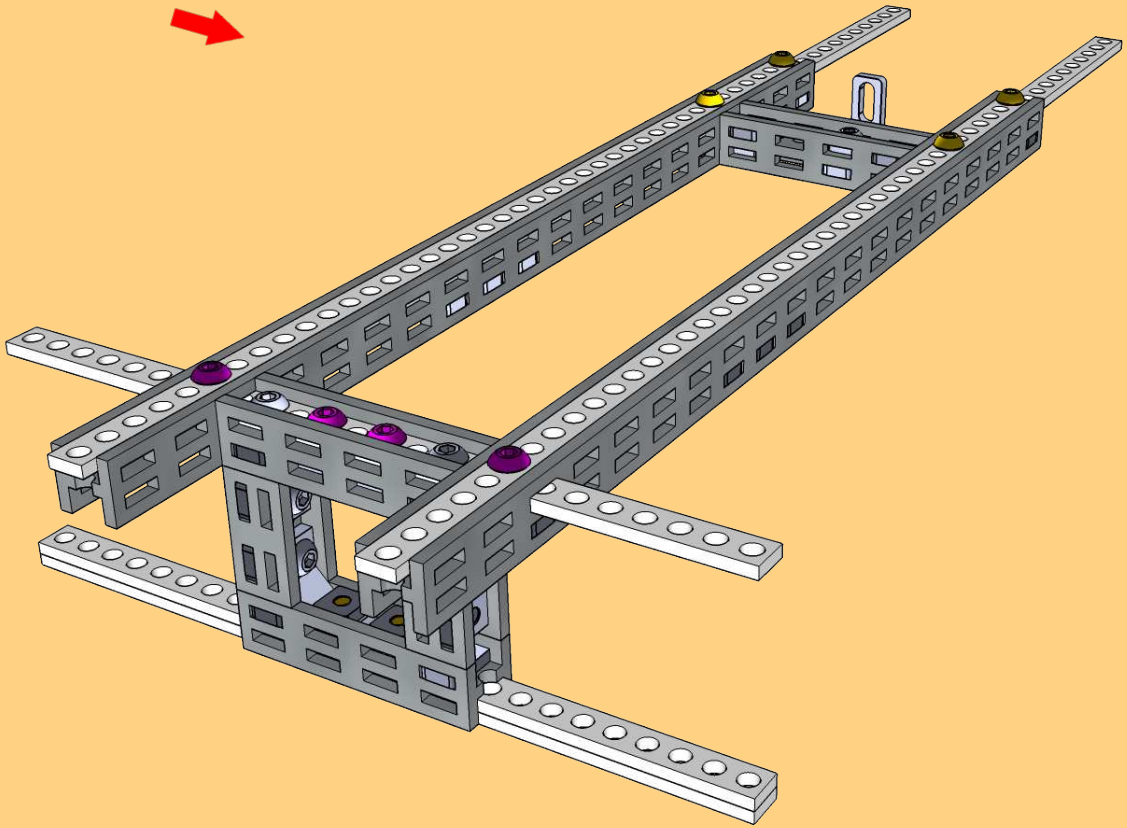

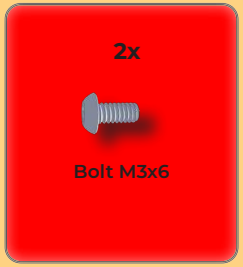

totem

PART 4

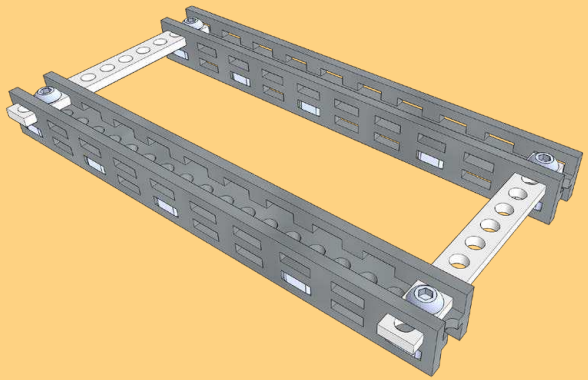

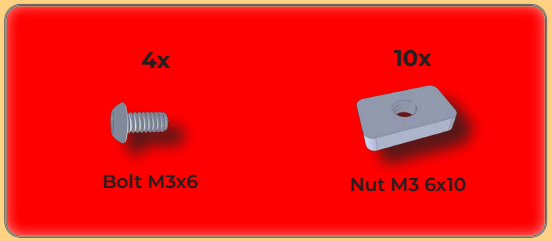

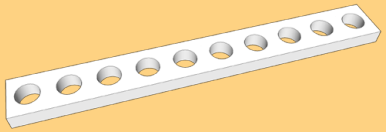

5cm/10H	2x

10 cm	2x

totem

10 cm	2 x

1

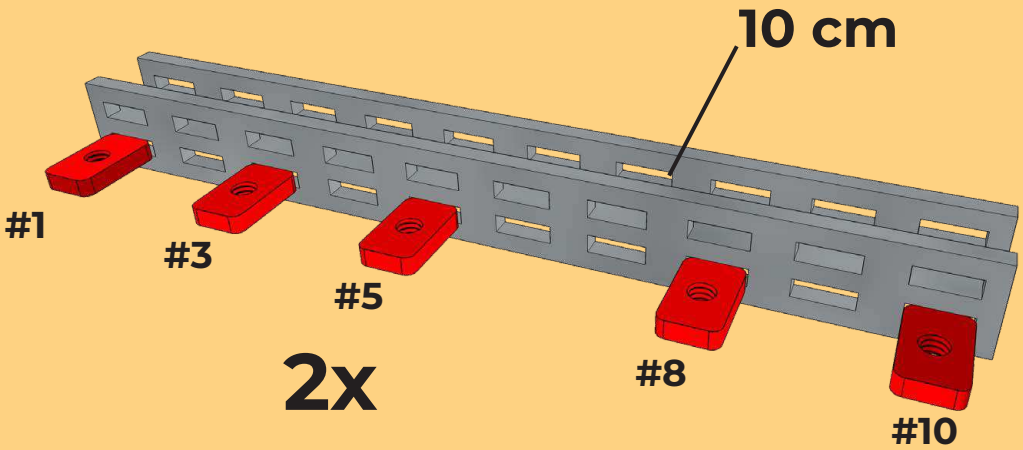

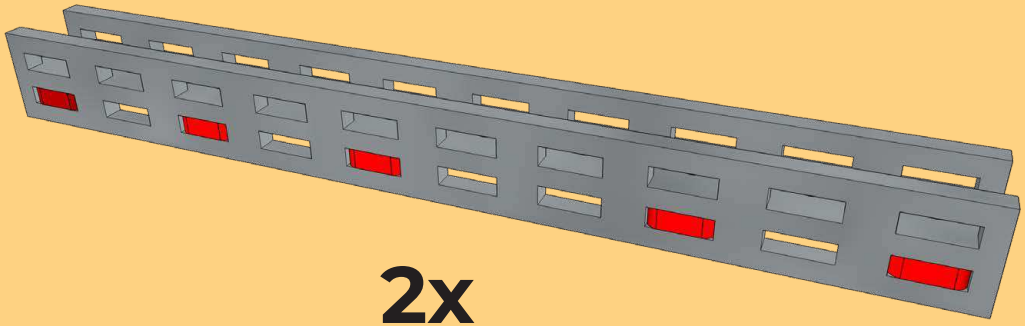

v1.3

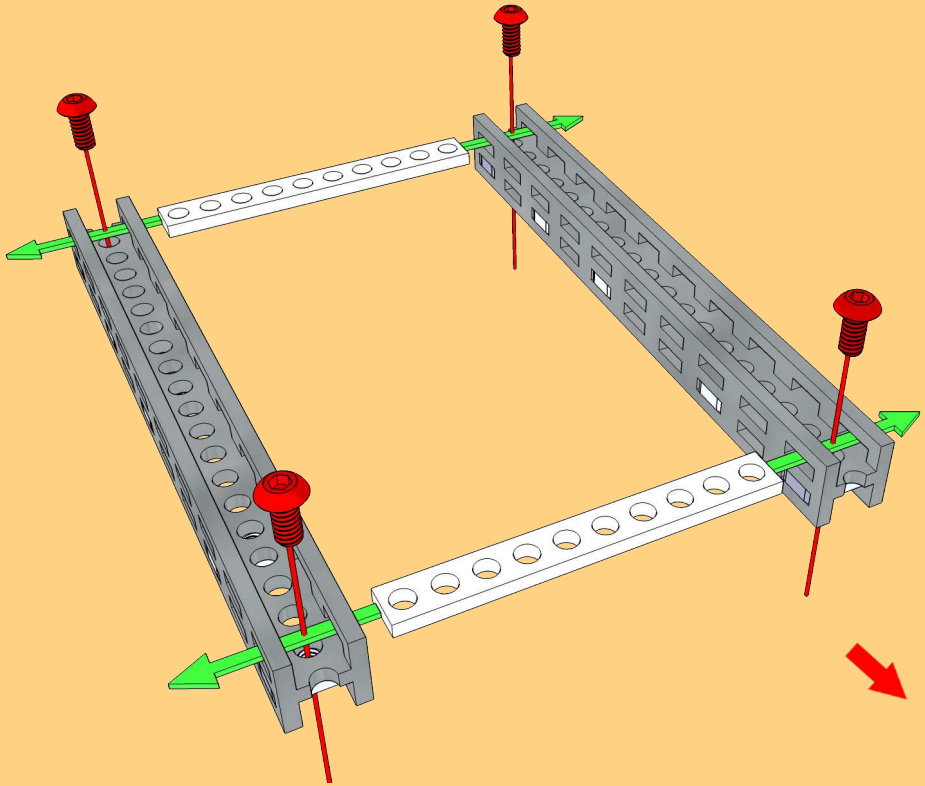

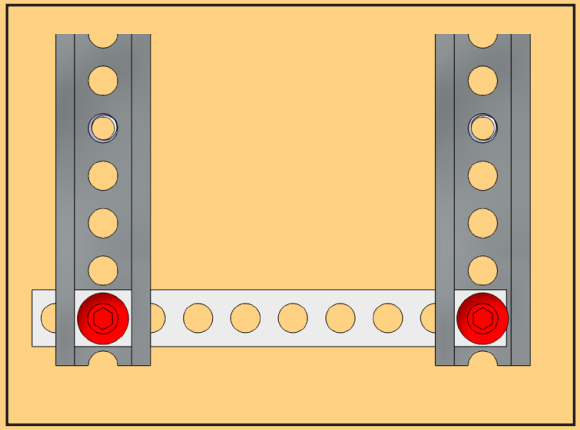

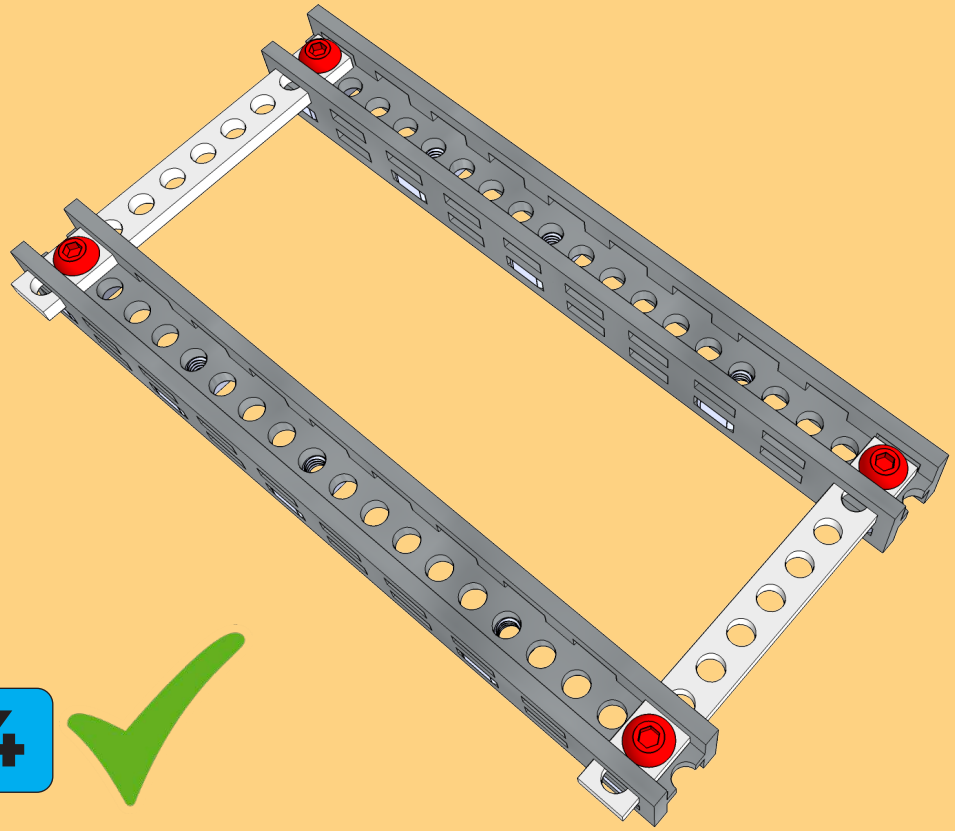

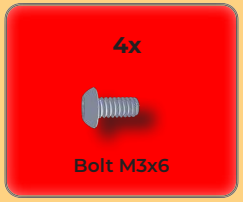

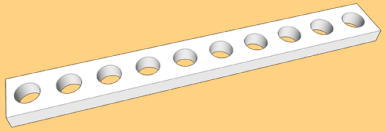

5cm/10H	2x

PART 4

totem

v1.3

PART 5

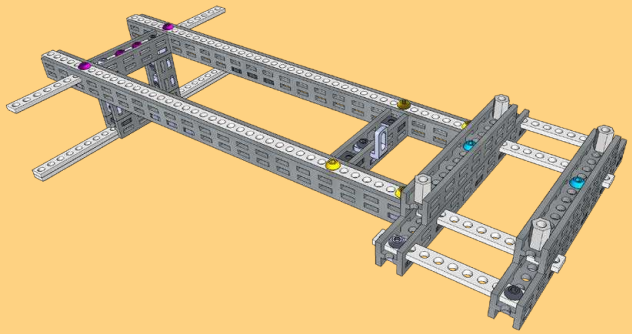

8x	4x	2x
Bolt M3x6	Threaded spacer M3x8mm	Bolt M3x14

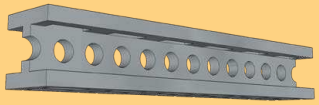

7 cm	2x

4x

Bolt M3x6

1

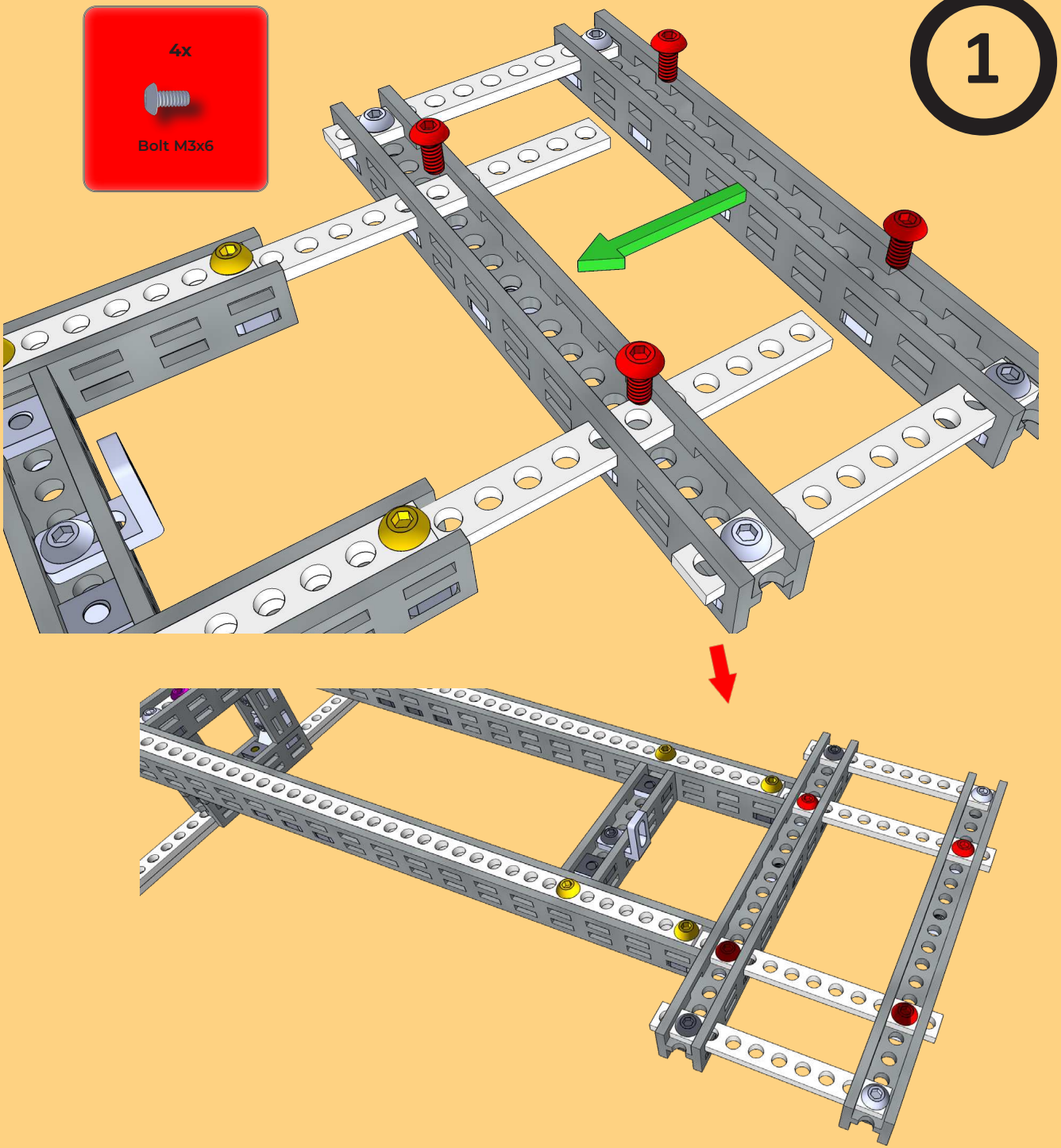

totem

v1.3

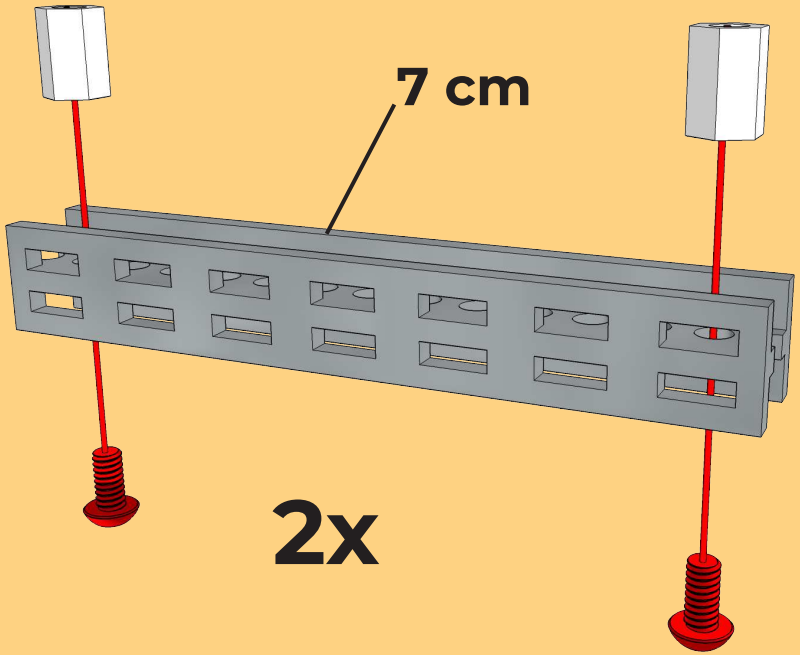

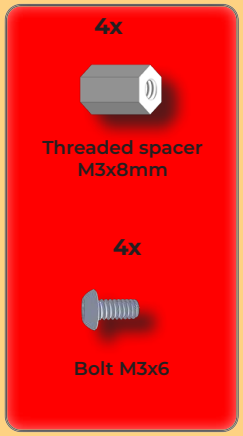

7 cm	2x

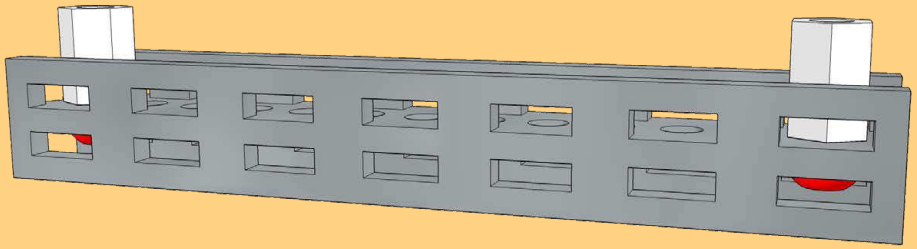

totem

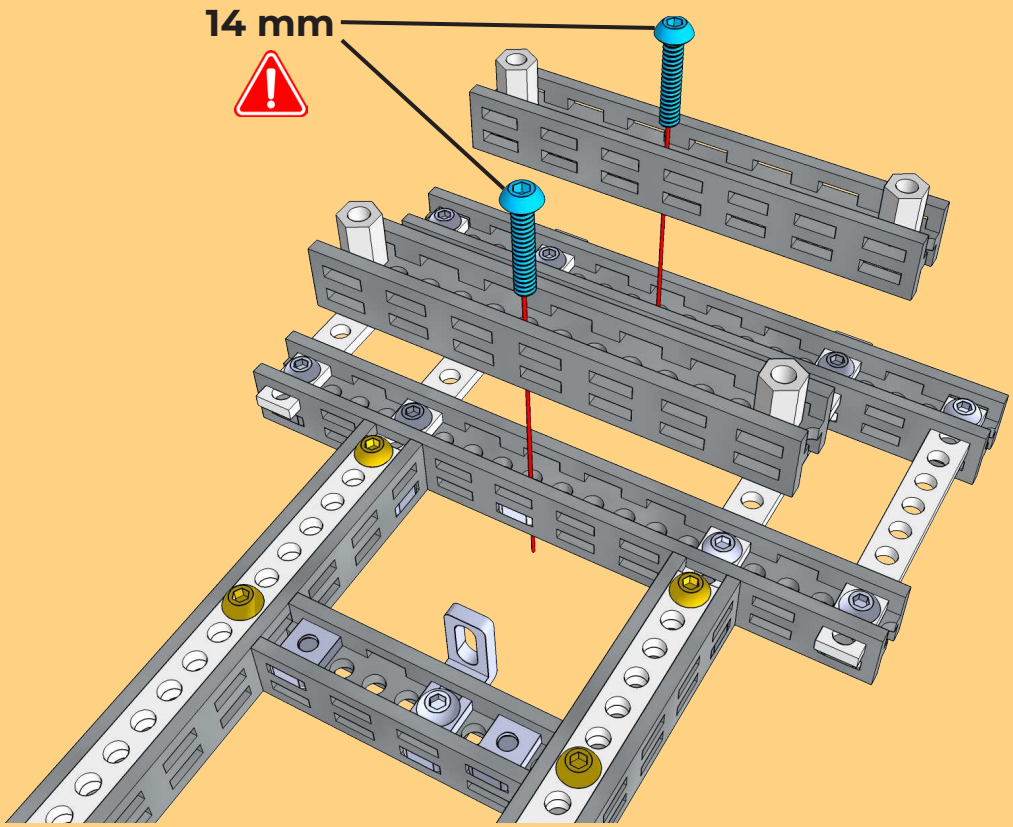

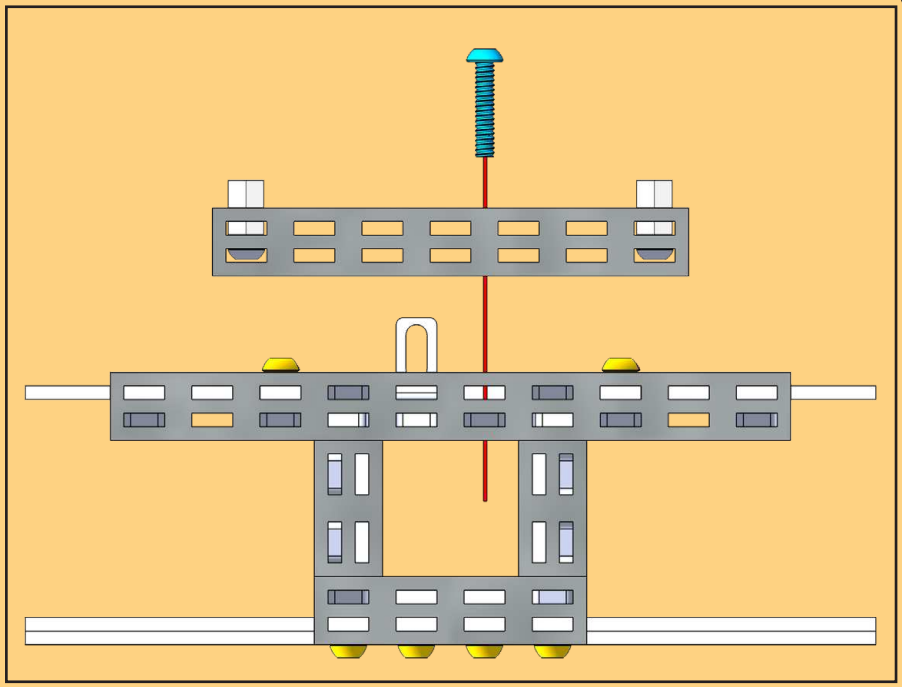

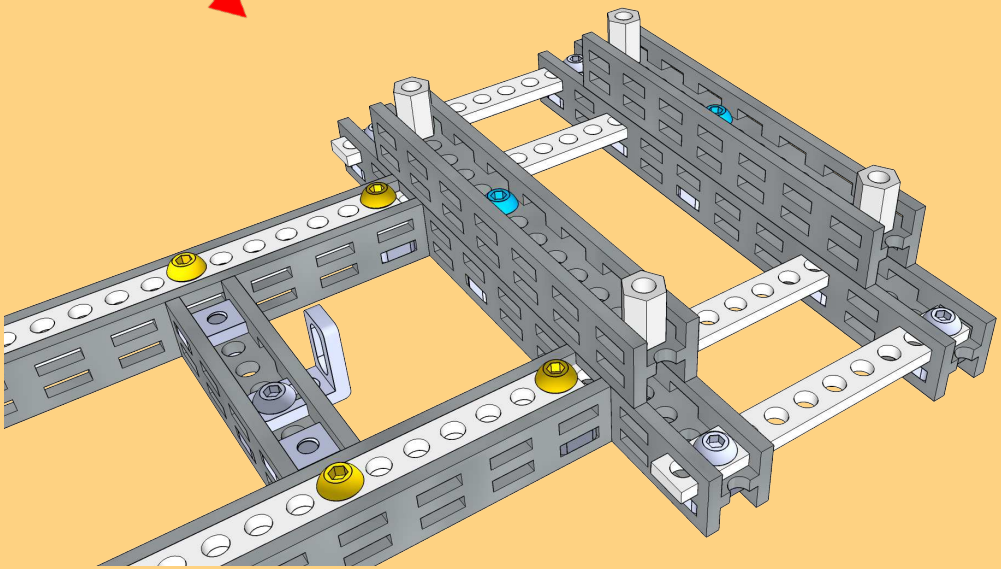

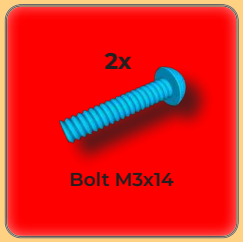

PART 5

totem

PART 6

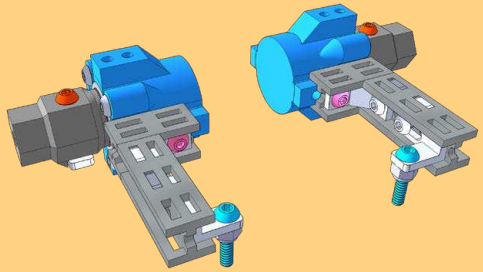

14x Bolt M3x6	2x Bolt M3x8	2x Bolt M3x14	2x Bolt M3x16
6x Nut M3 6x10	2x Lock Nut M3	2x C-Bracket	1x L-Twist mirror
1x L-Twist	4x Bearing 12x4x18mm	2x Lock Nut M4	
2x 12mm Wheel Coupler 3D	2x 12mm Bearing Axle	2x 18mm Wheel Barrel	

2 cm	2x
3 cm	2x

totem

1

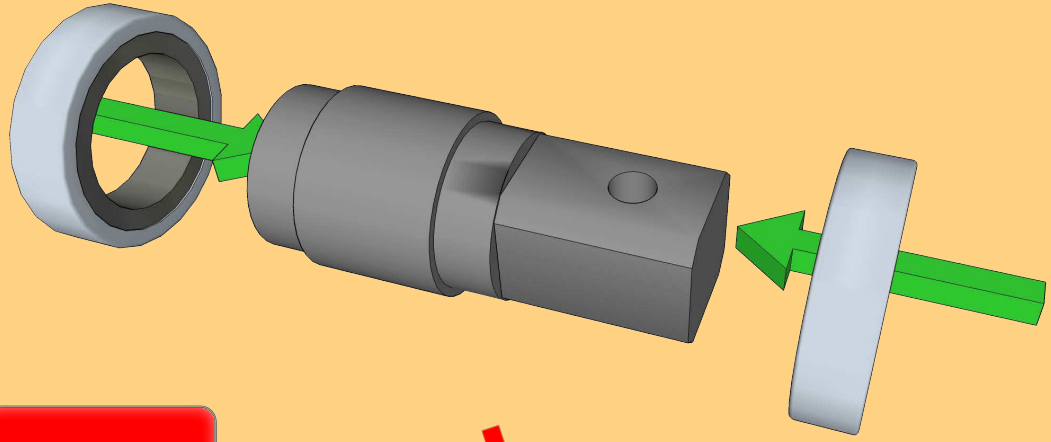

2x 12mm Bearing Axle

4x Bearing 12x4x18mm

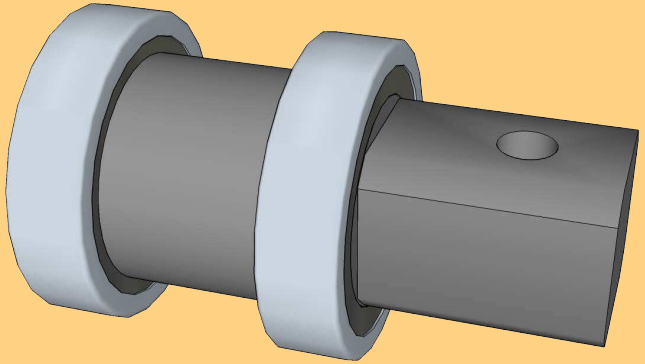

2x

v1.3

2

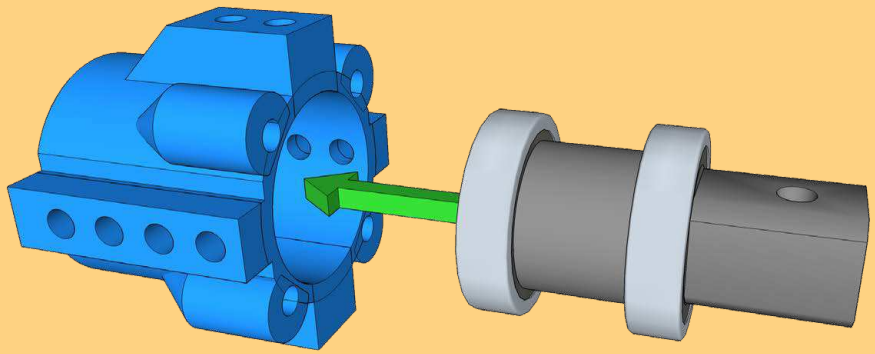

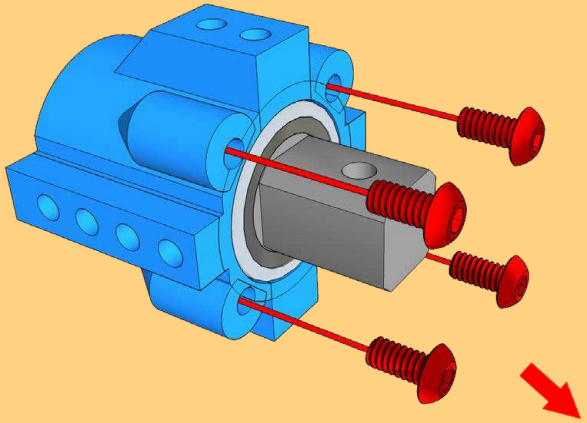

2x

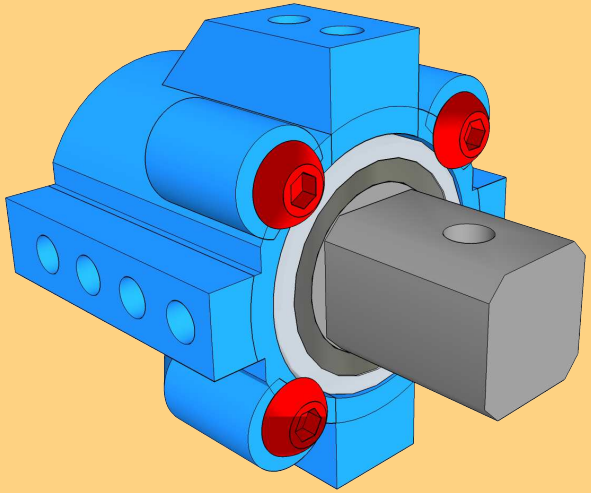

8x

Bolt M3x6

2x

18mm Wheel Barrel

totem

v1.3

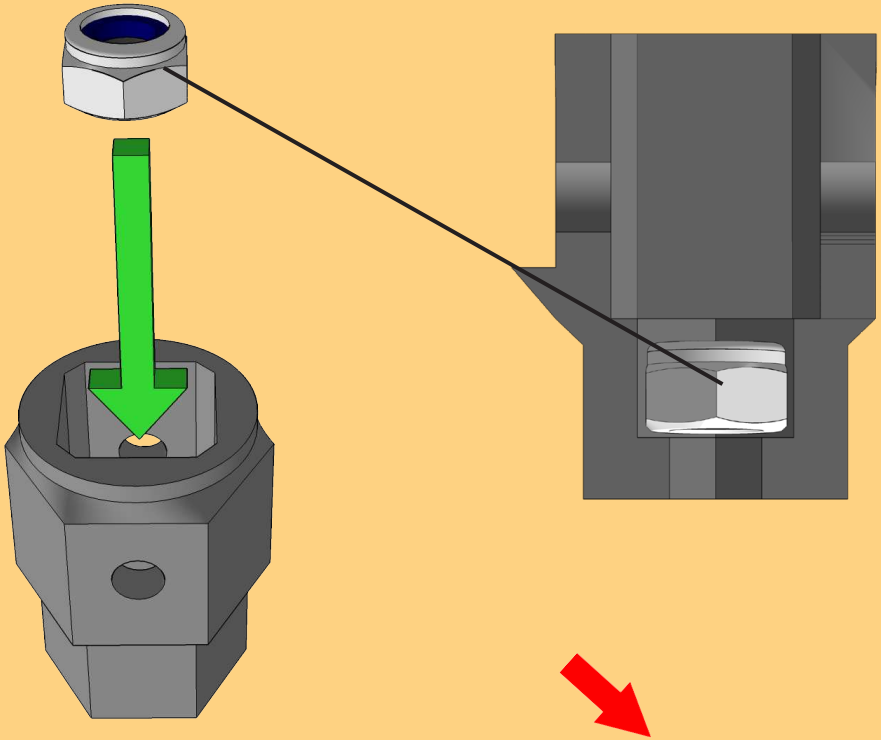

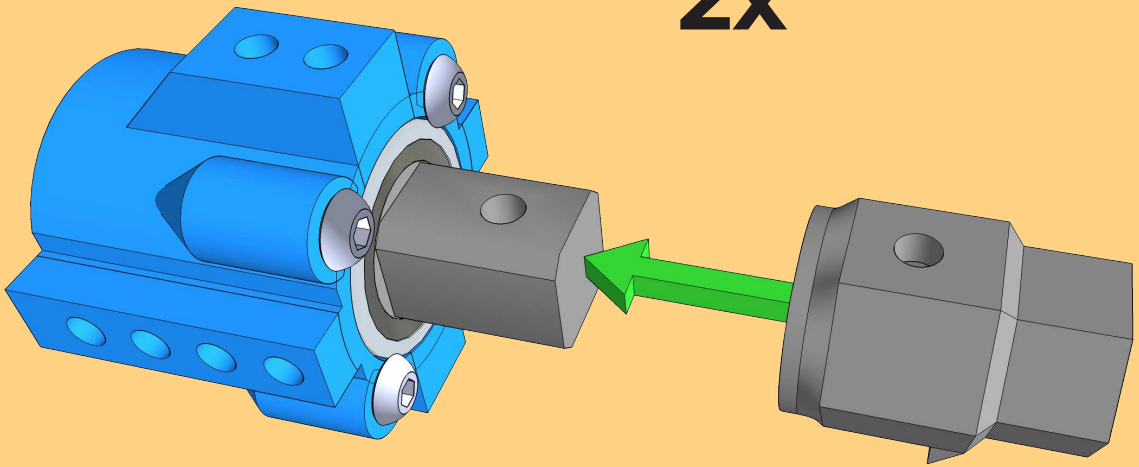

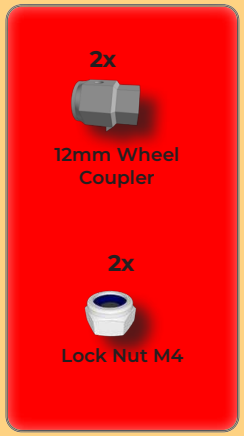

totem

4

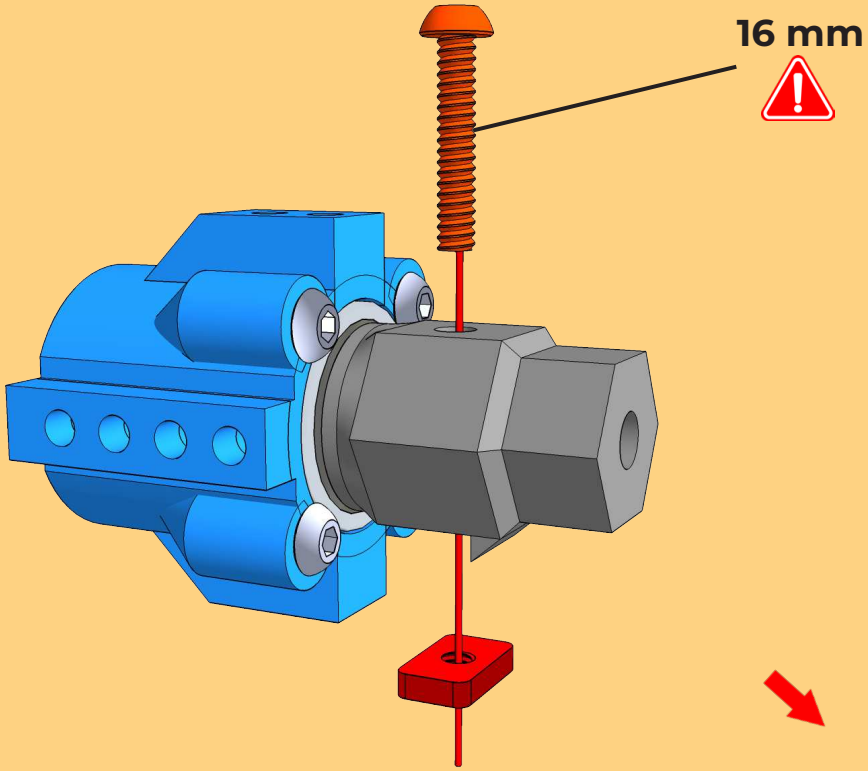

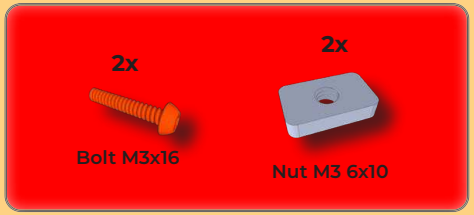

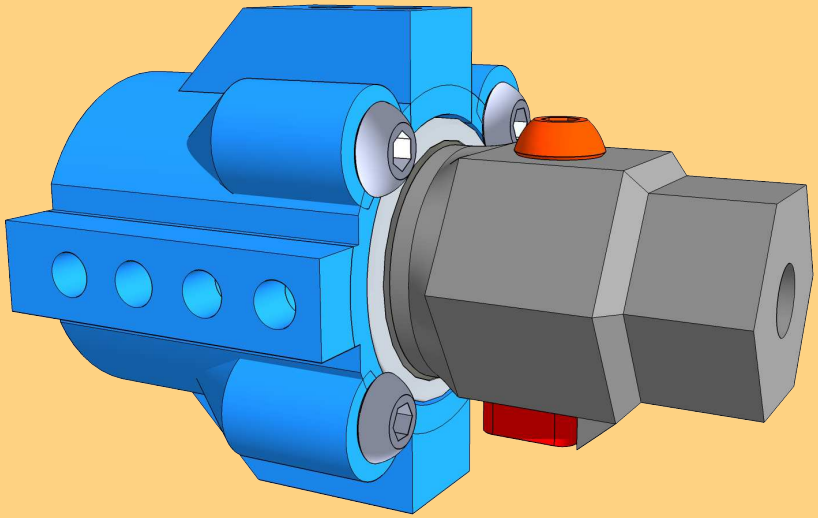

2x

totem

v1.3

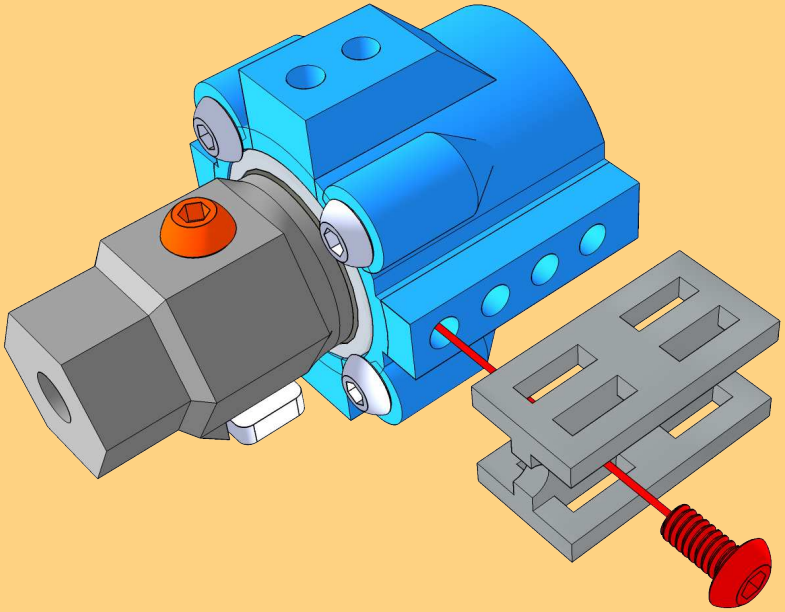

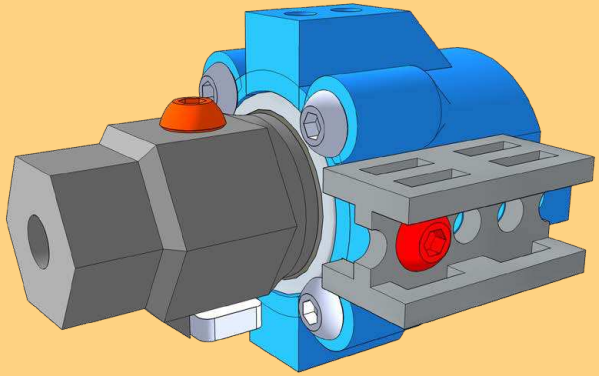

2x

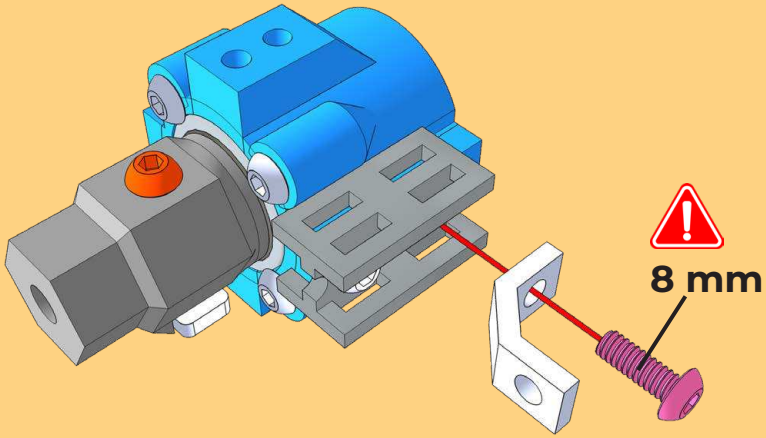

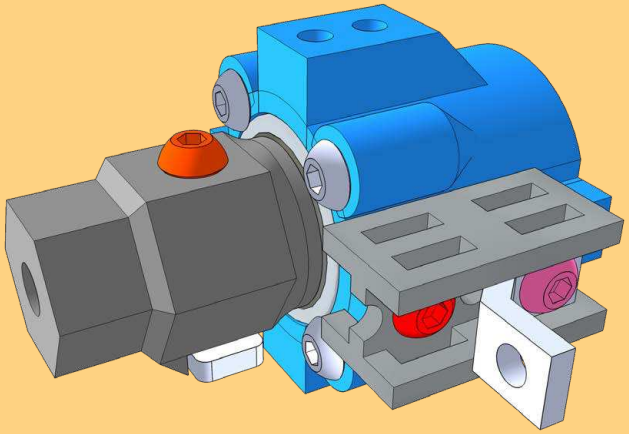

2x

2x	C-Bracket
2x	Bolt M3x6
2x	Bolt M3x8

2 cm	2x

totem

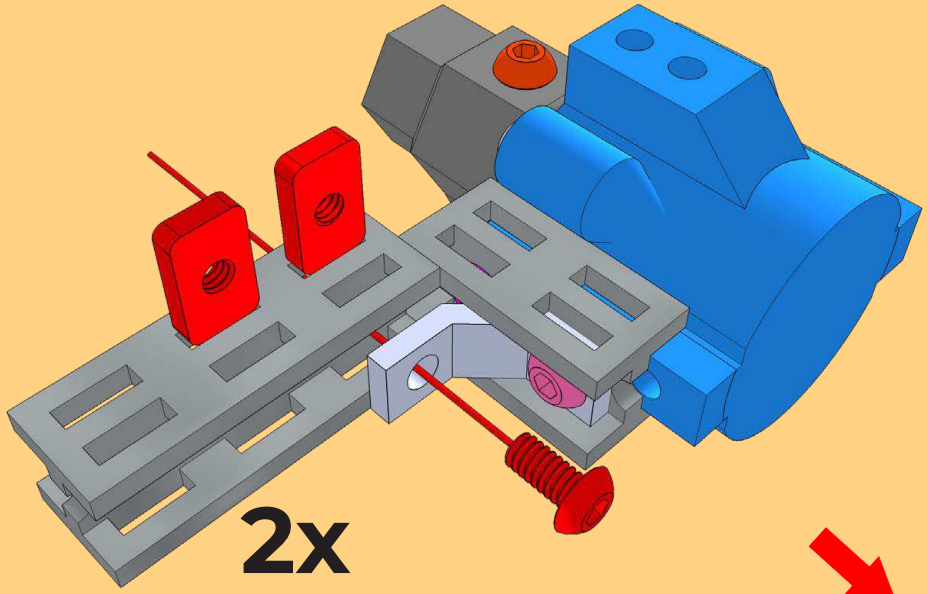

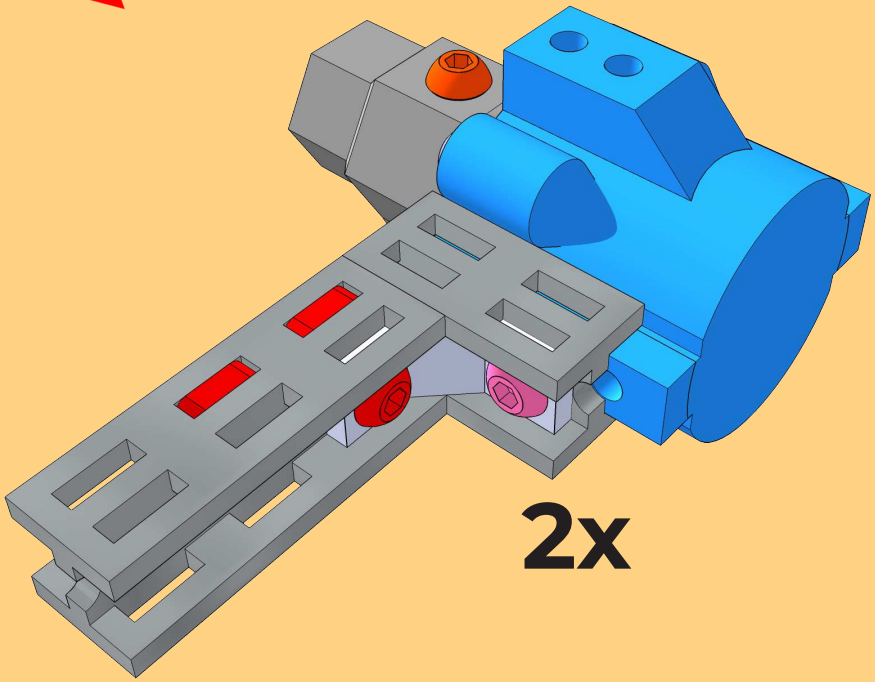

3 cm	2x

totem

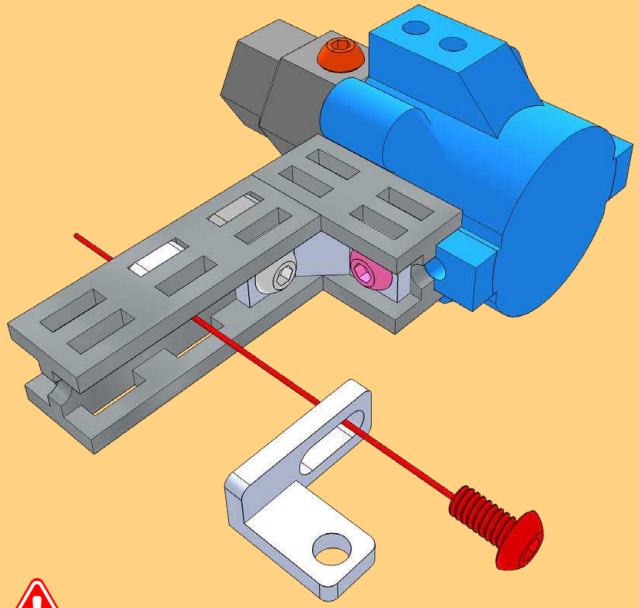

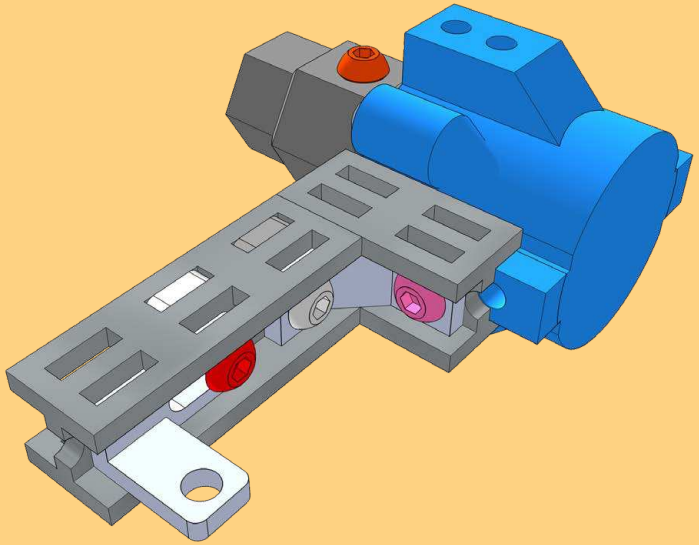

Left side

14 mm

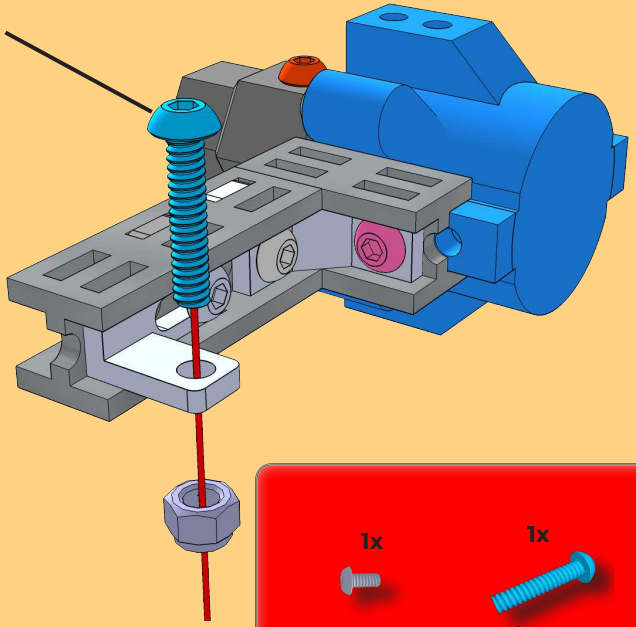

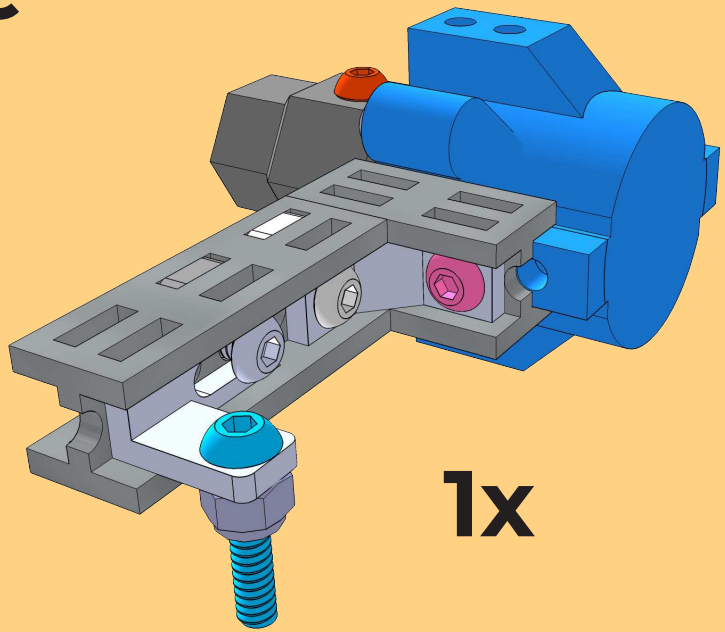

1x

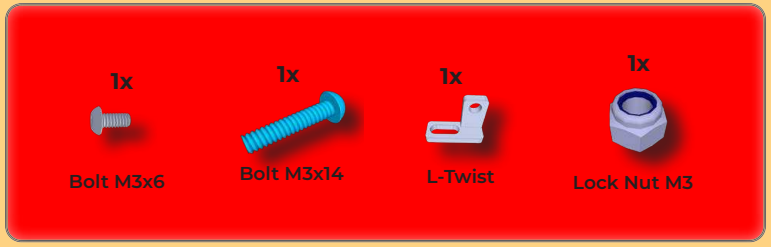

totem

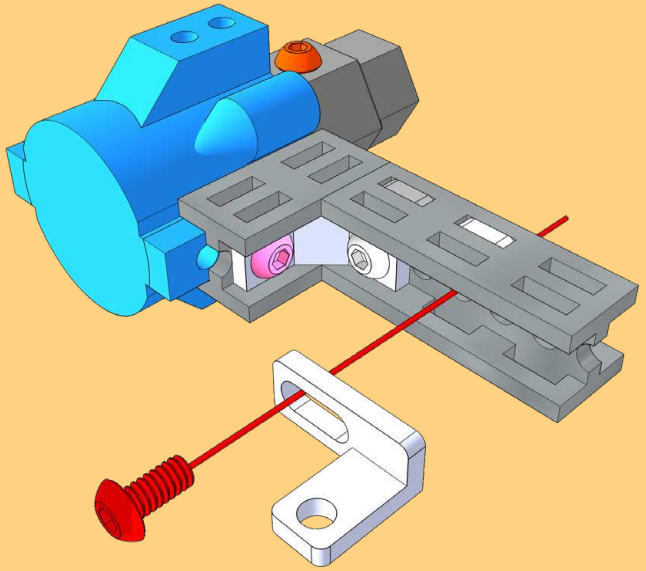

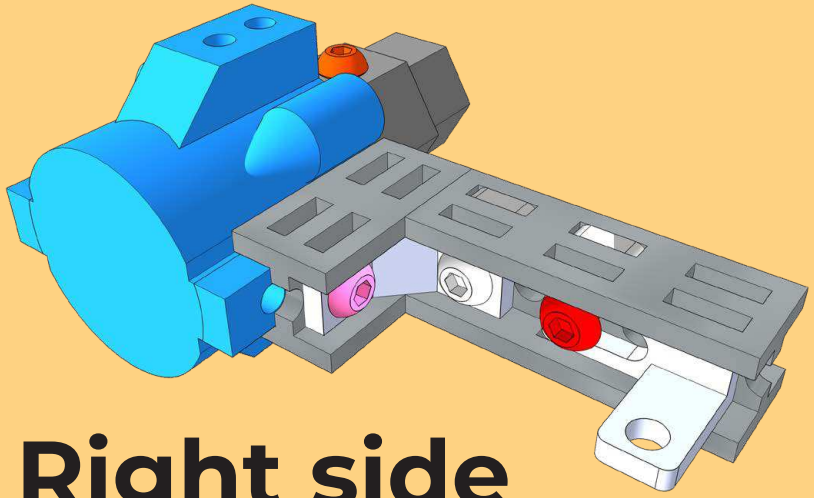

Right side

14 mm

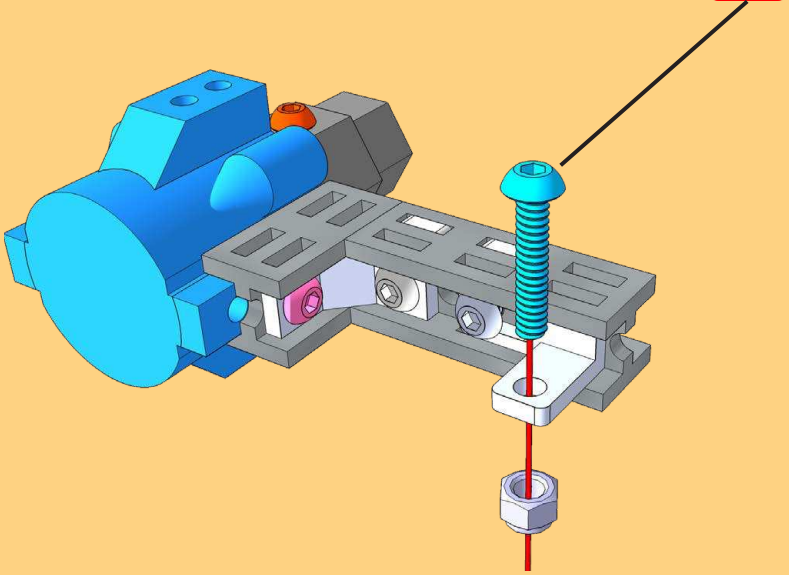

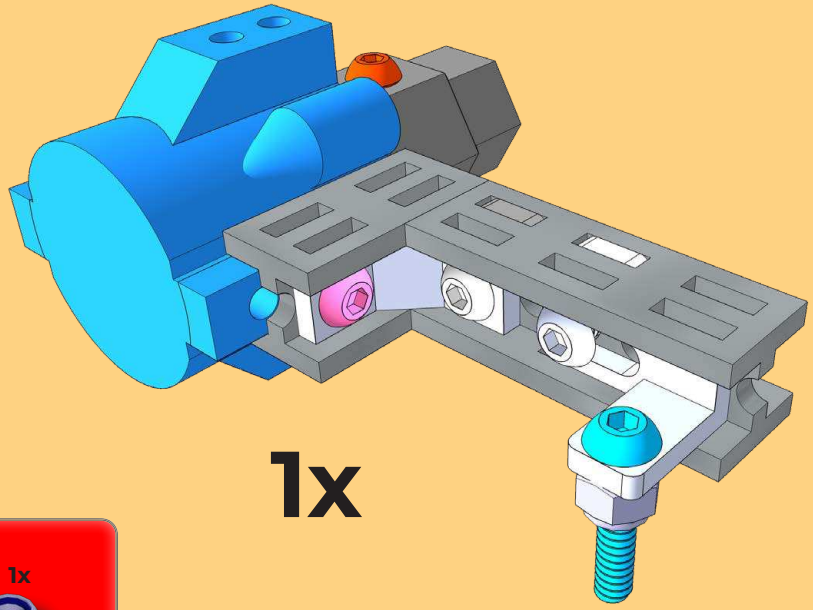

1x

1x	1x	1x	1x
Bolt M3x6	Bolt M3x14	L-Twist mirror	Lock Nut M3

totem

Left side

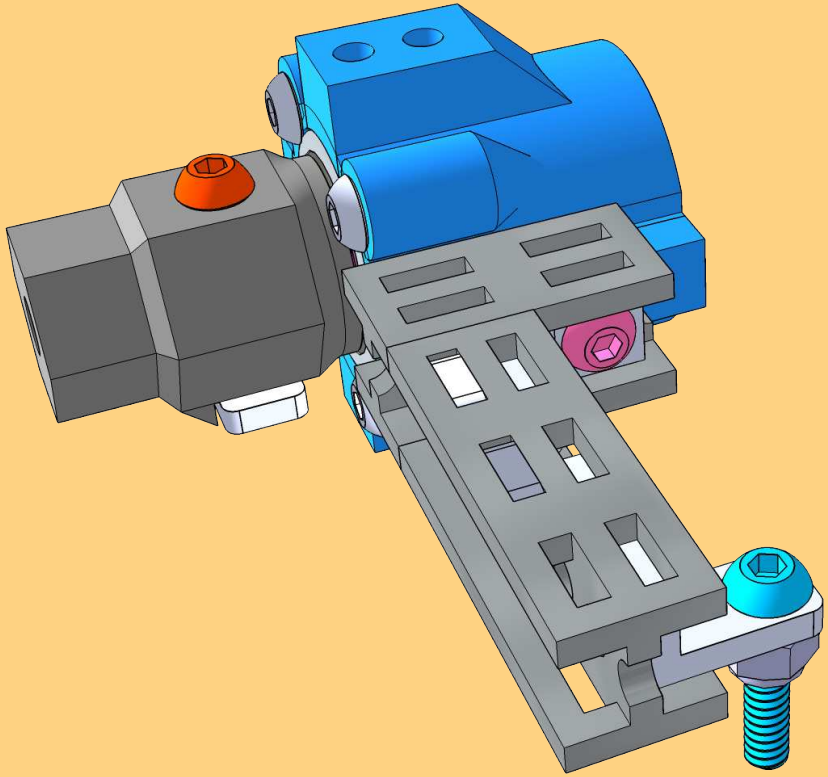

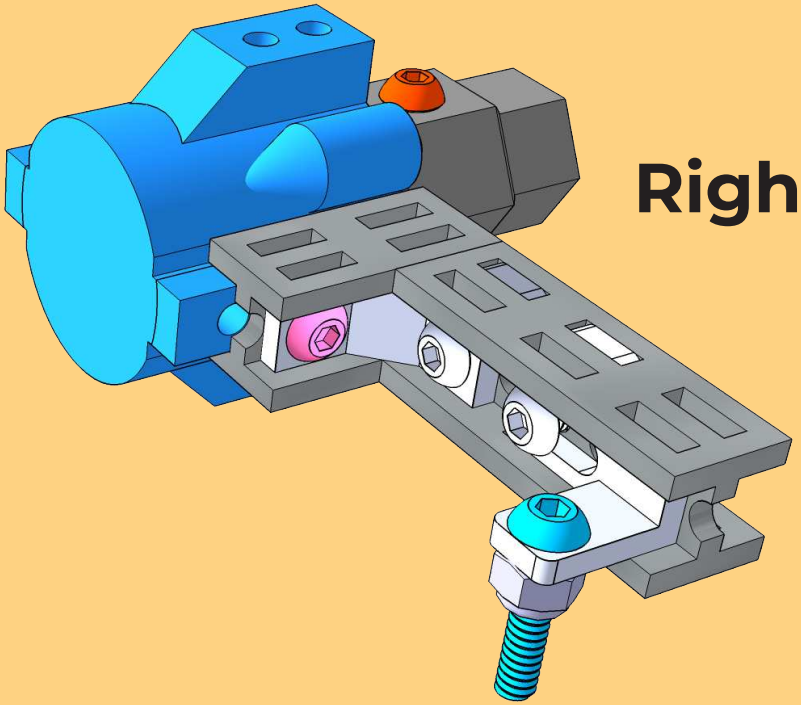

Right side

PART 6

totem

PART 7

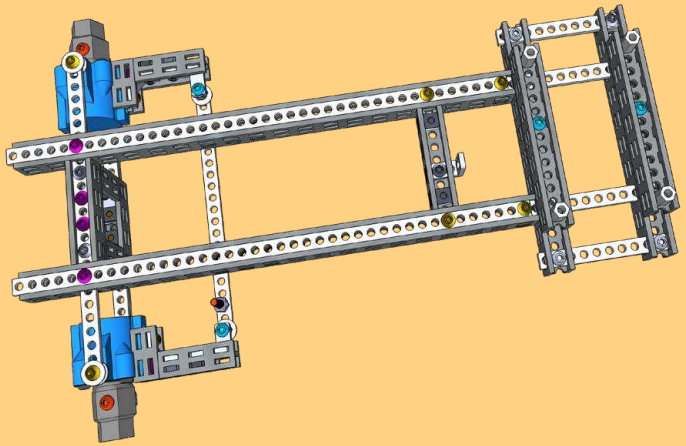

4x	1x	3x	8x
Bolt M3x10	Bolt M3x16	Lock Nut M3	Metal washer M3 9x0.8mm

10.5cm/21H	1 x

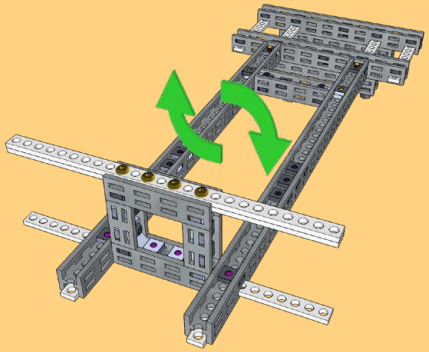

bottom up

1

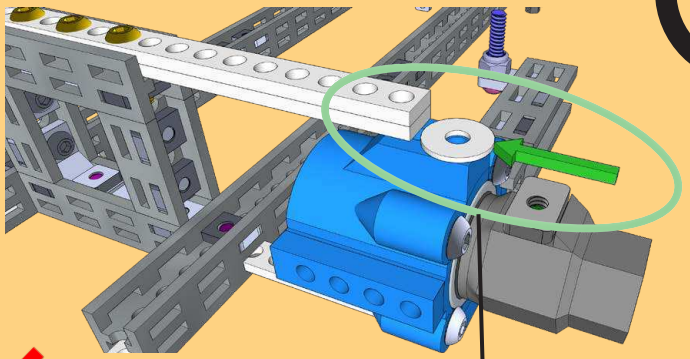

10 mm

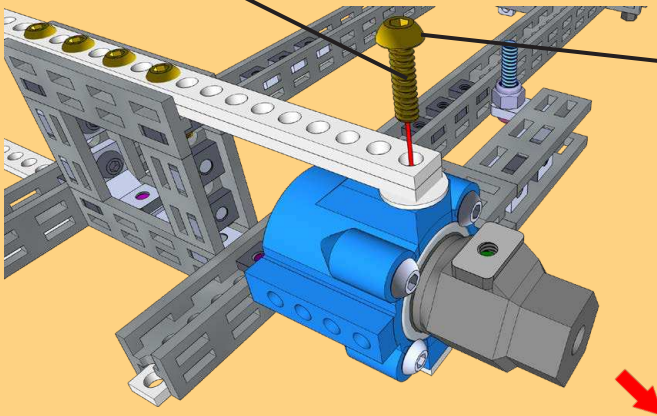

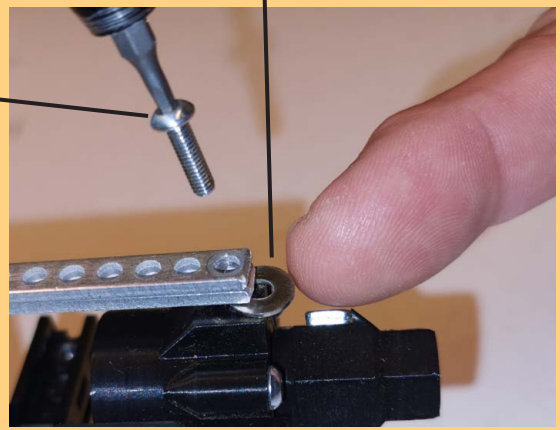

1x	1x
Metal washer M3 9x0.8mm	Bolt M3x10

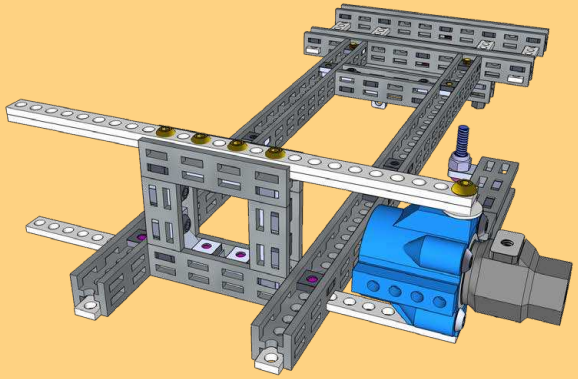

totem

v1.3

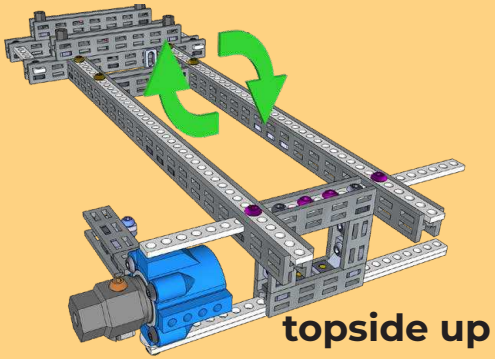

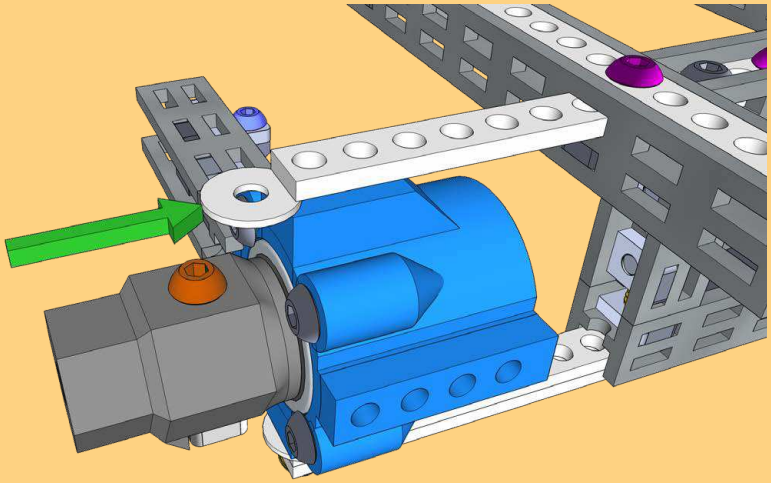

10 mm

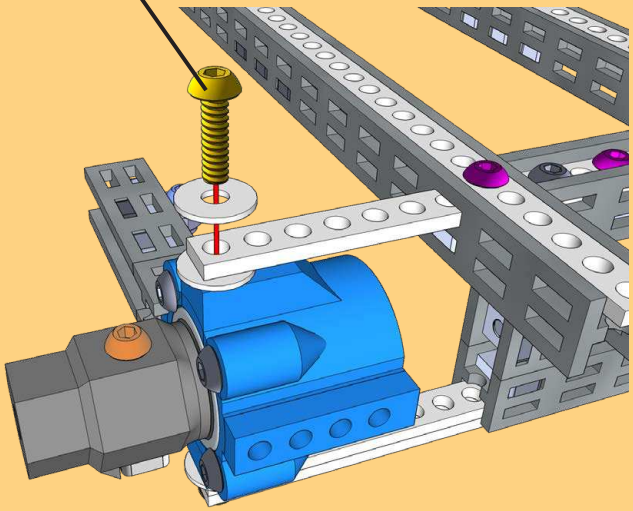

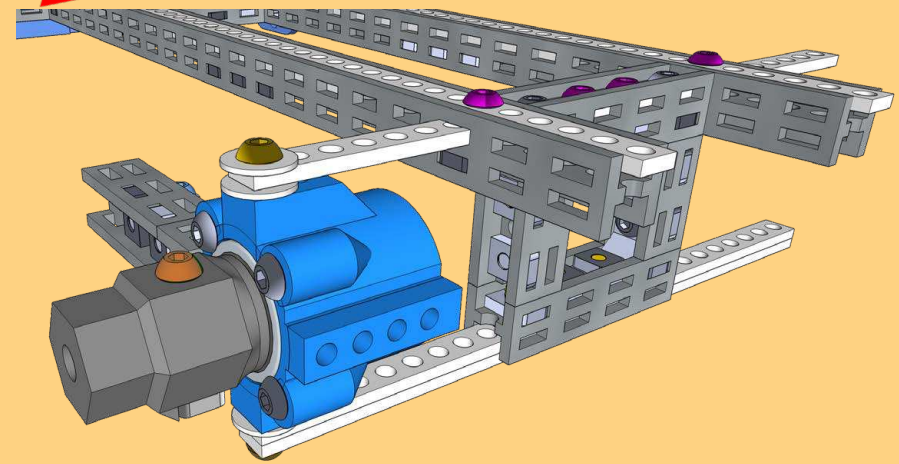

totem

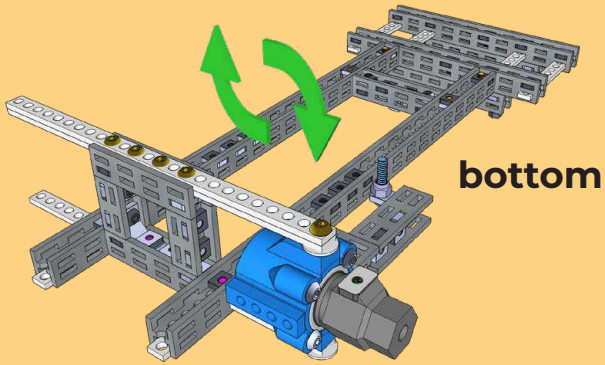

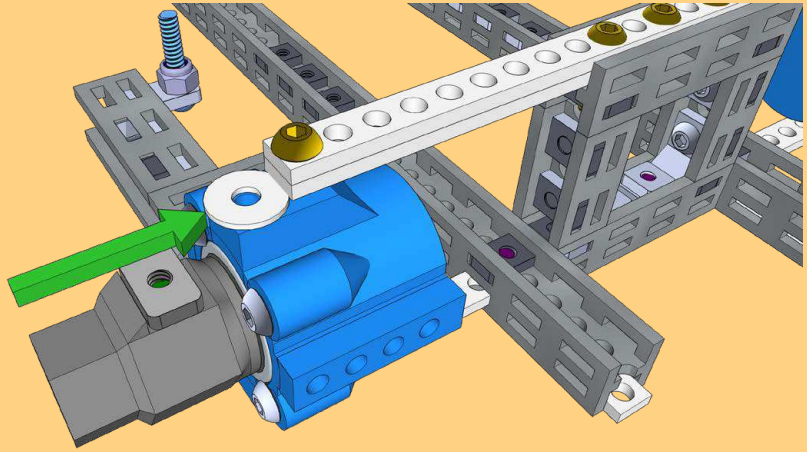

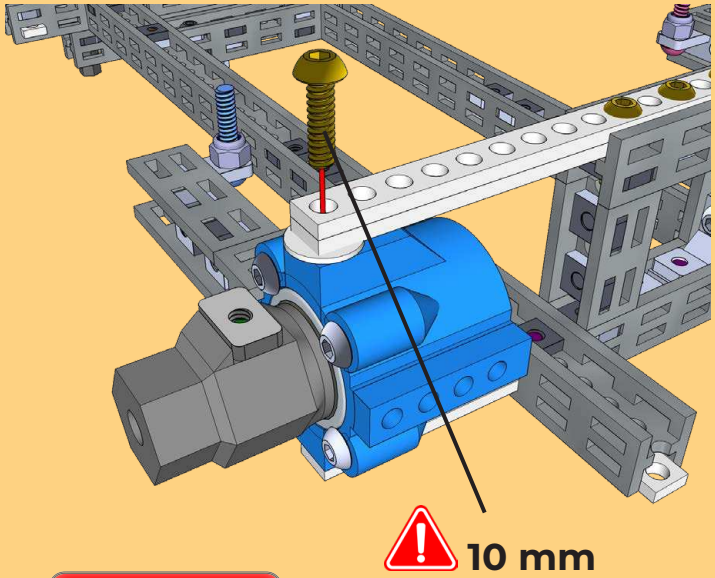

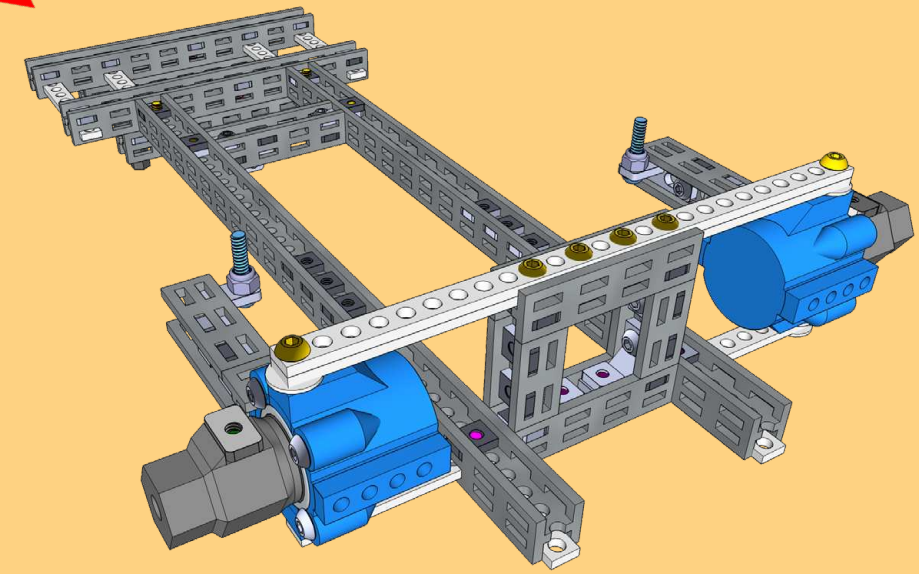

totem

4

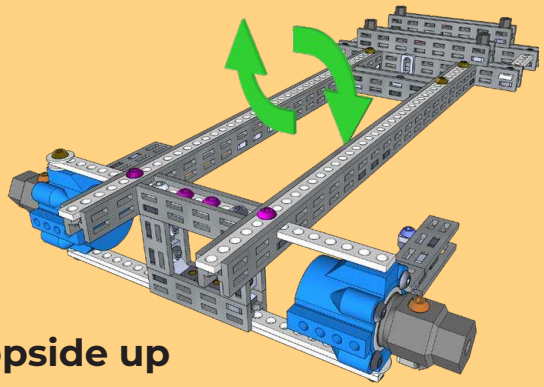

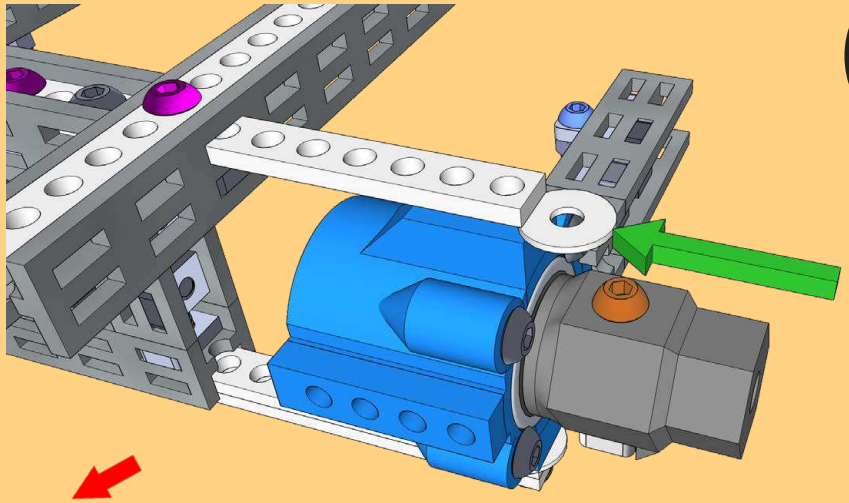

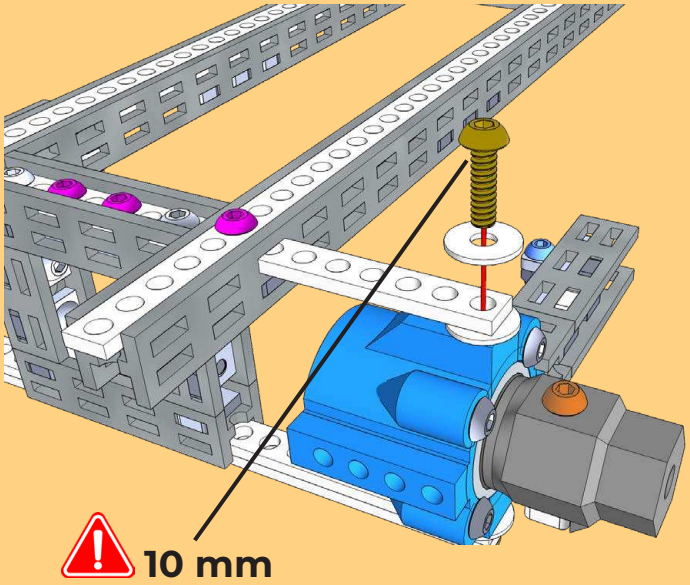

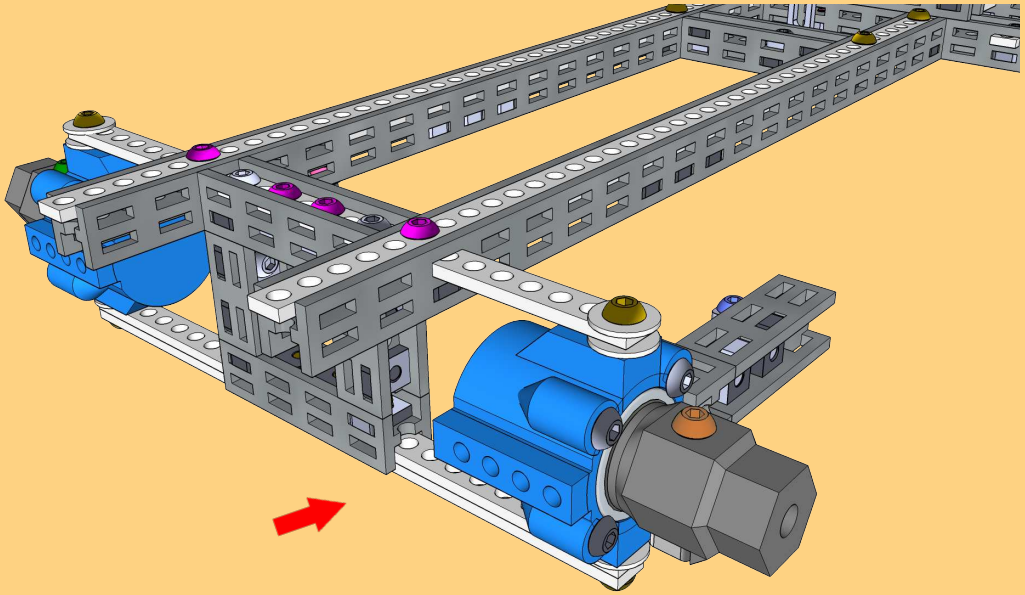

totem

v1.3

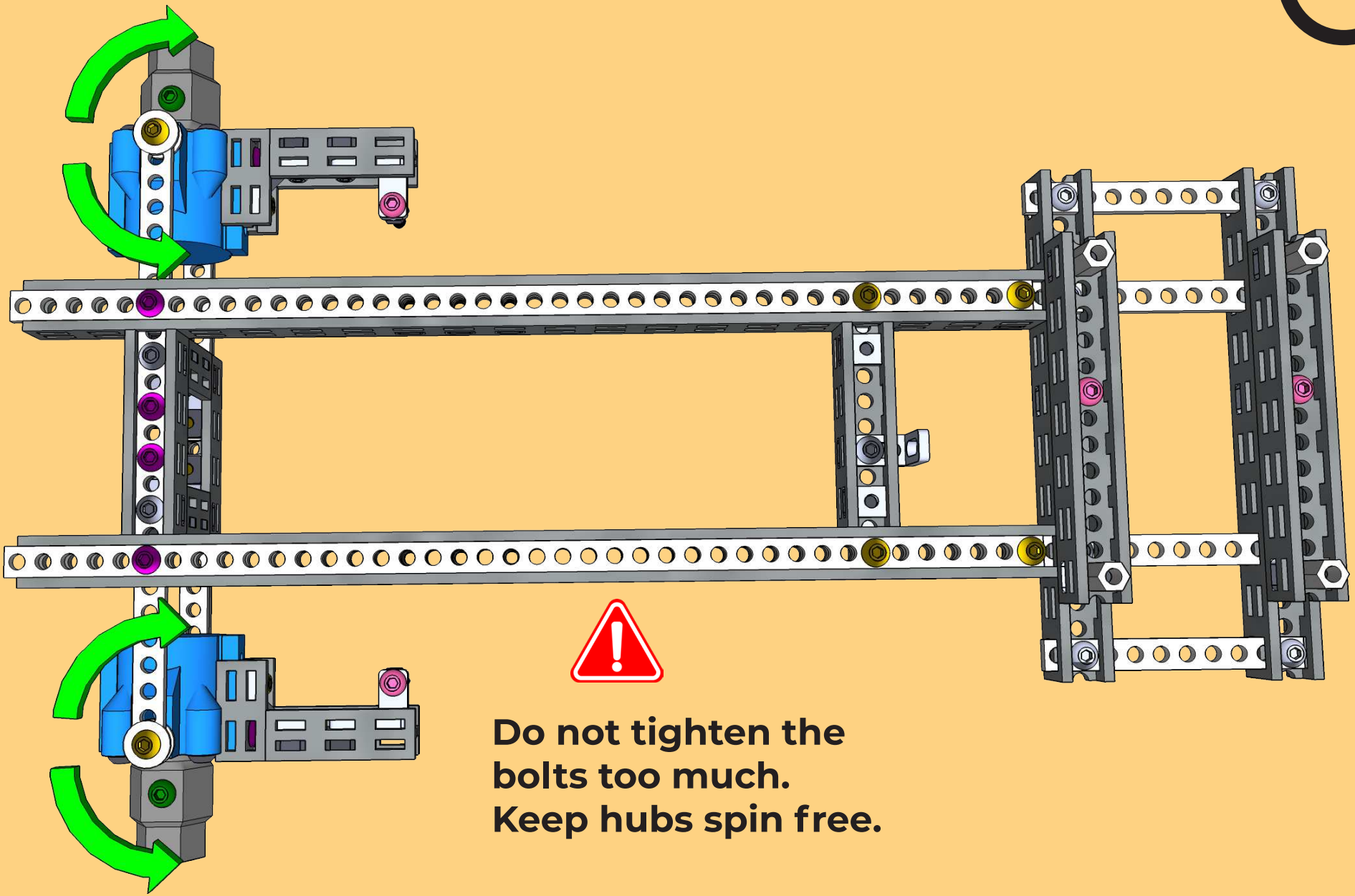

Do not tighten the bolts too much.
Keep hubs spin free.

totem

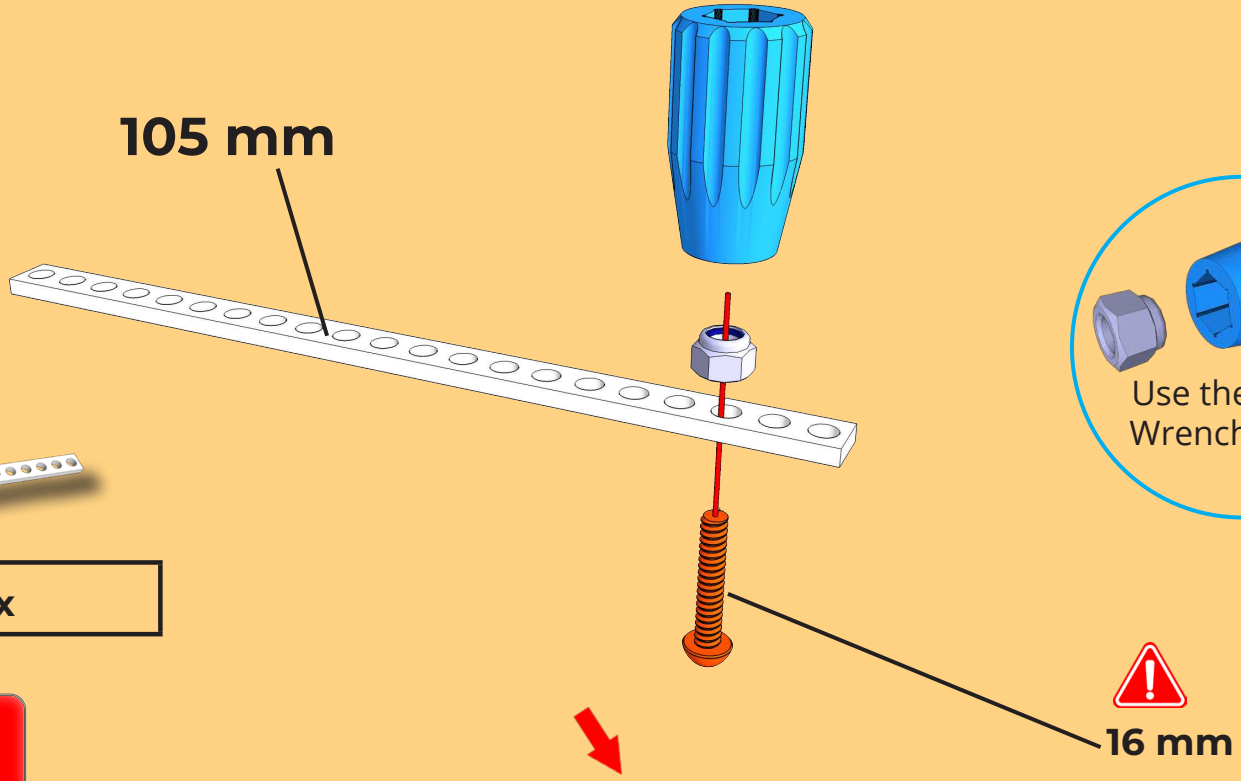

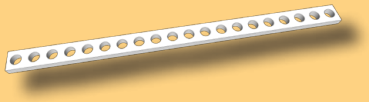

10.5cm/21H	1 x

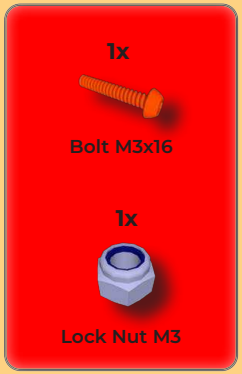

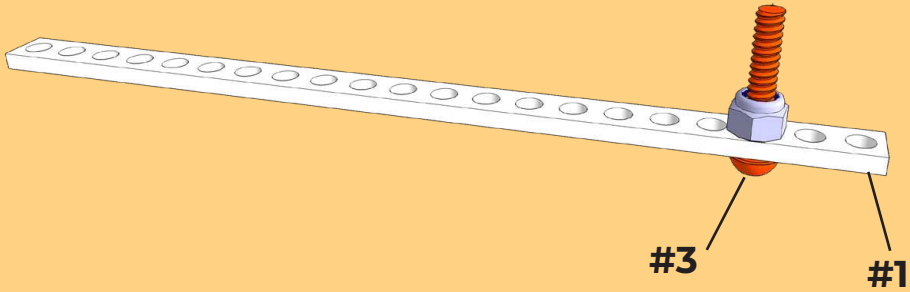

totem

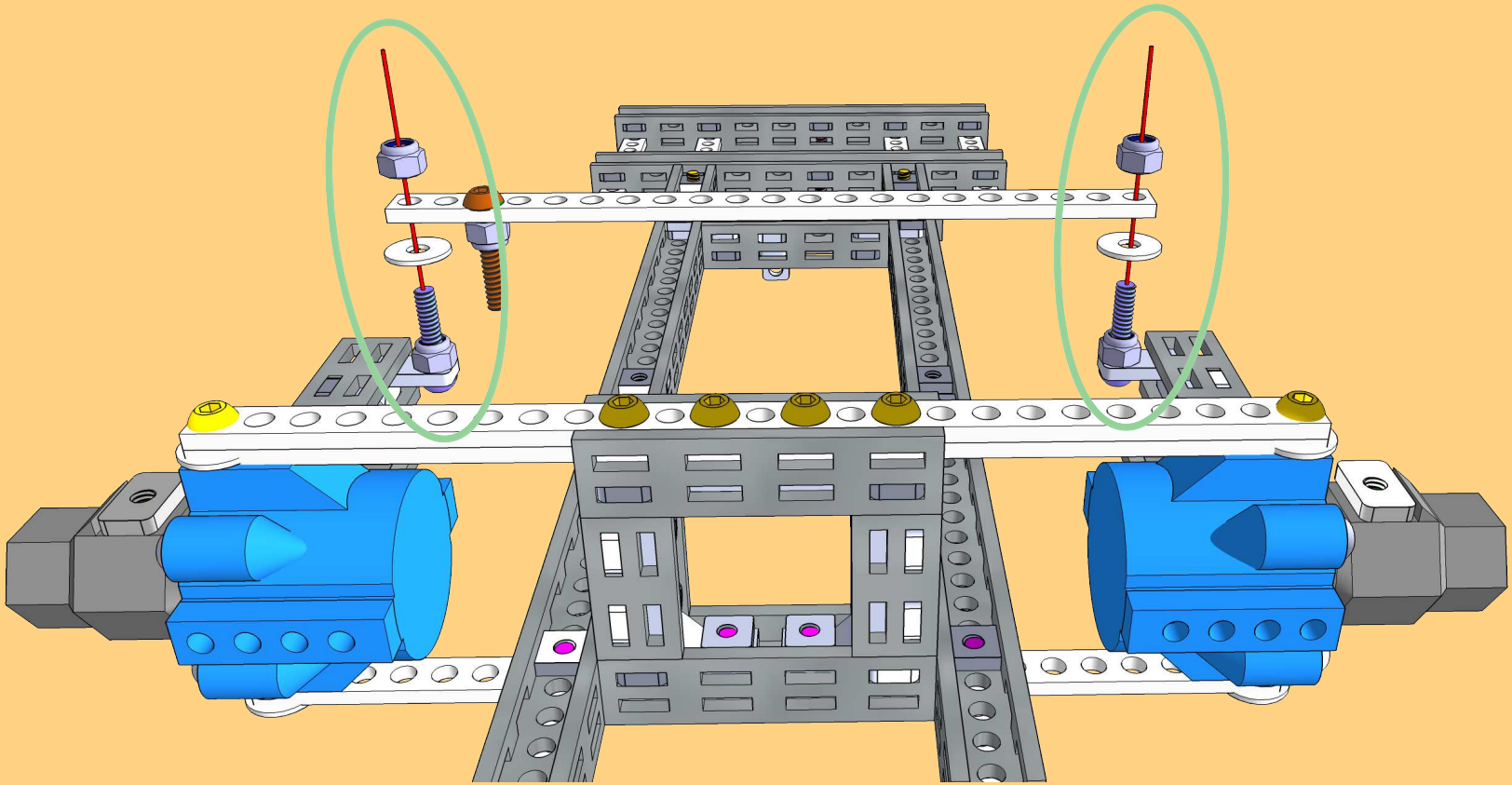

7

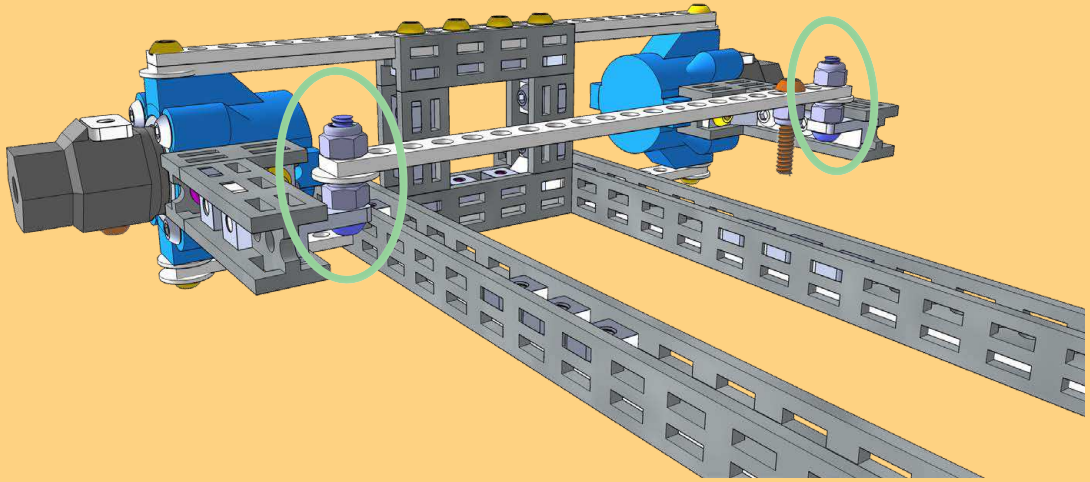

totem

v1.3

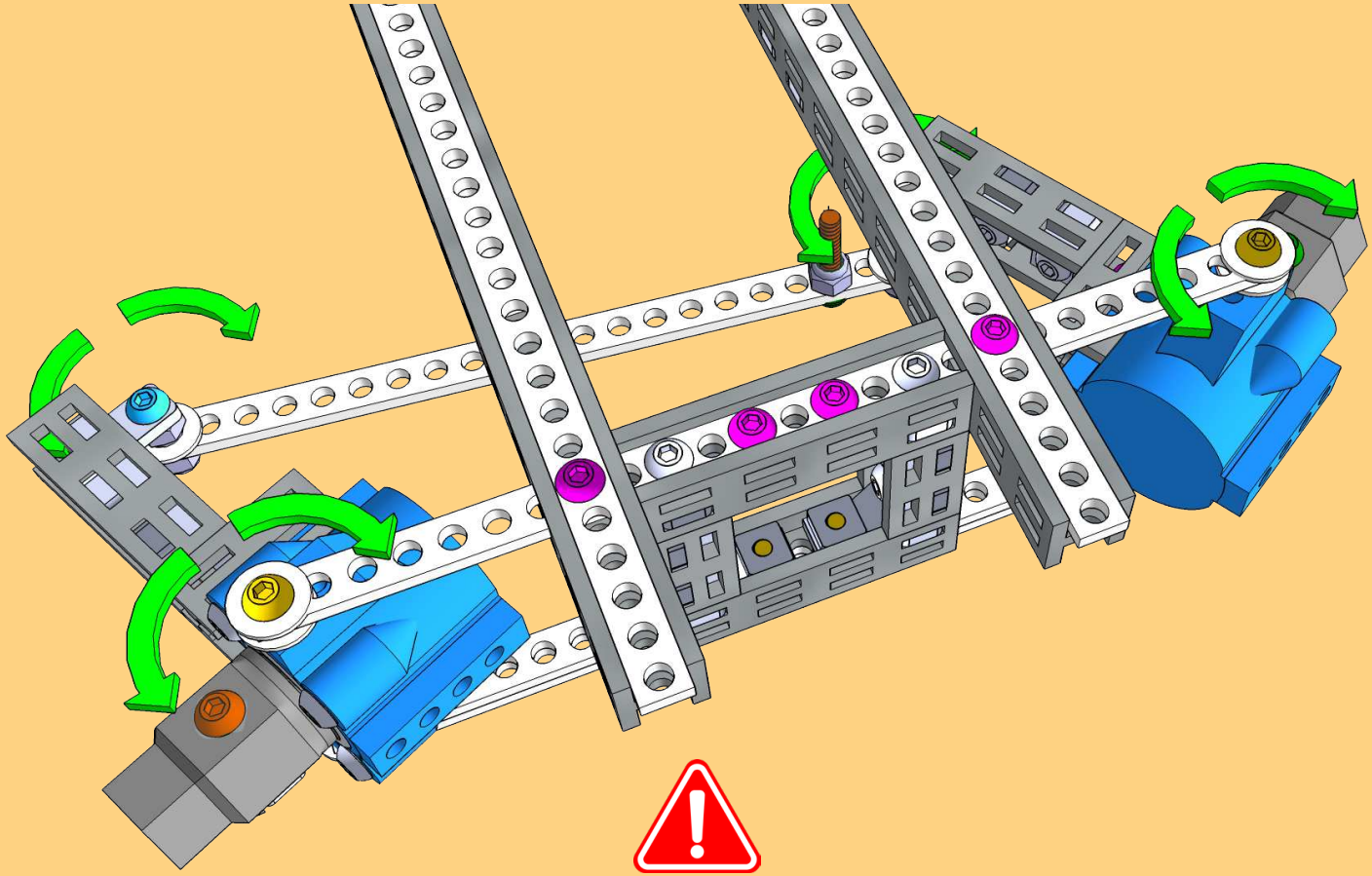

Do not tighten the nuts and bolts too much. Keep links spin free.

PART 7

totem

PART 8

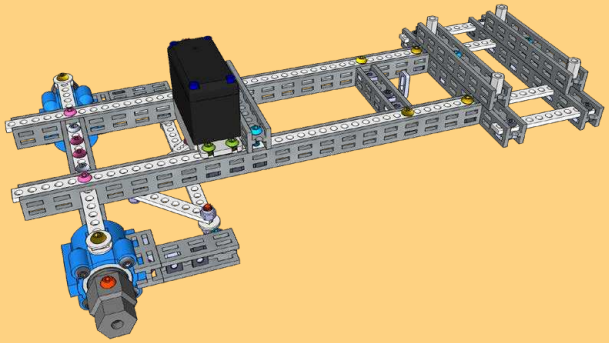

1x	4x	2x	1x
Bolt M3x10	Bolt M3x12	Bolt M3x14	Bolt M3x16

1x	2x	3x	1x
Nut M3 6x10	Lock Nut M3	Metal washer M3 9x0.8mm	servo motor with strip arm

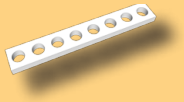

4cm/8H	1 x

6 cm	1x

totem

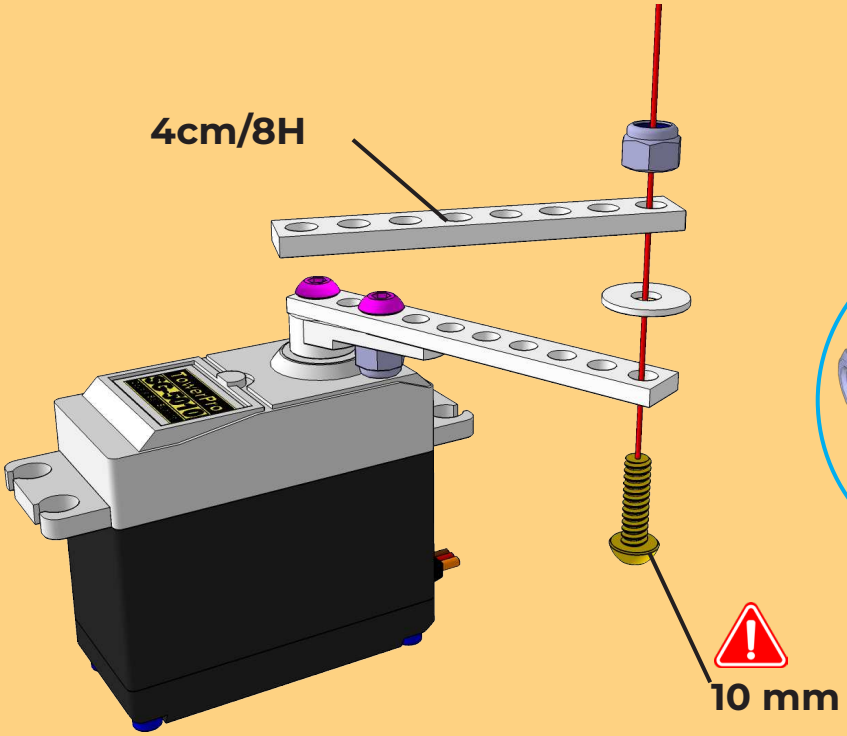

1

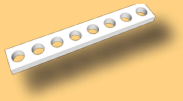

4cm/8H	1 x

1x	1x
Lock Nut M3	servo motor with strip arm
1x	1x
Metal washer M3 9x0.8mm	Bolt M3x10

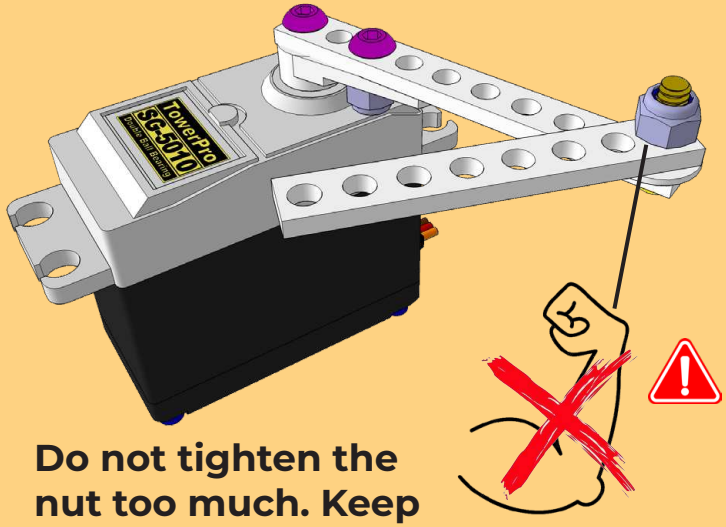

Do not tighten the nut too much. Keep link spin free.

v1.3

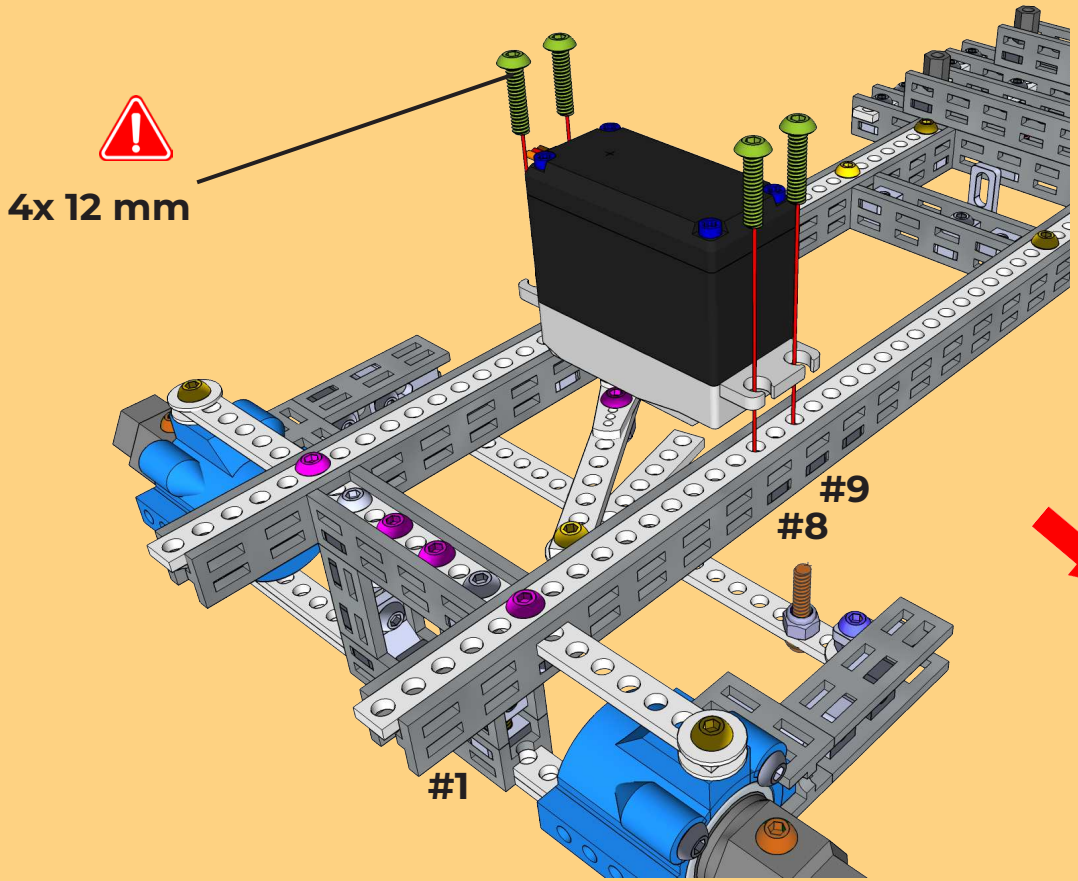

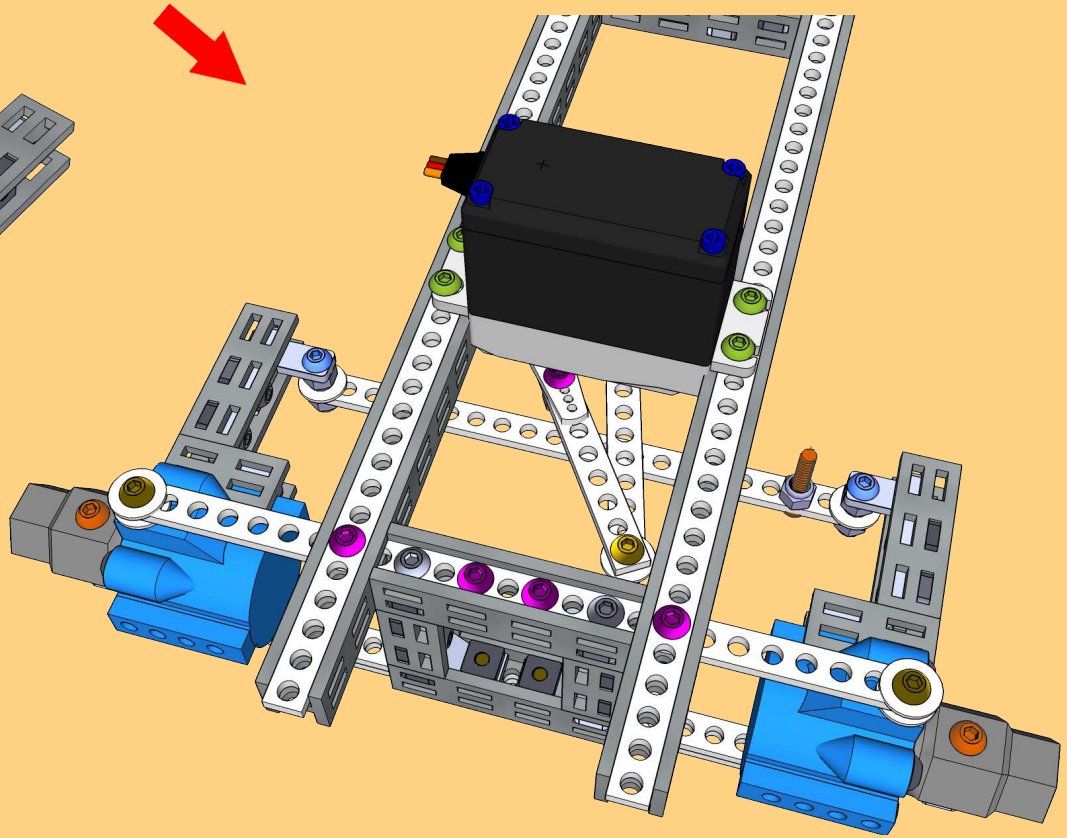

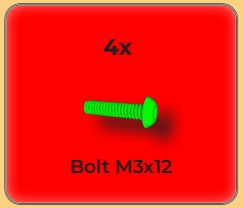

totem

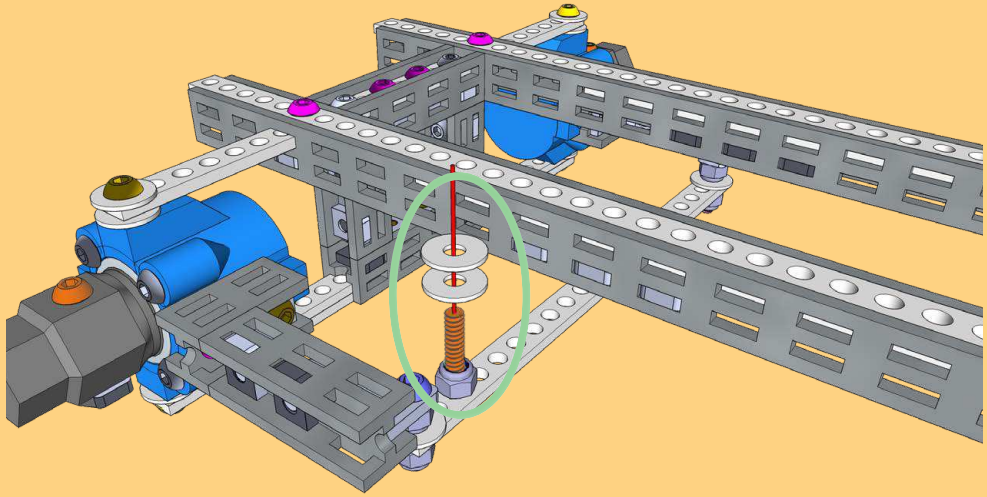

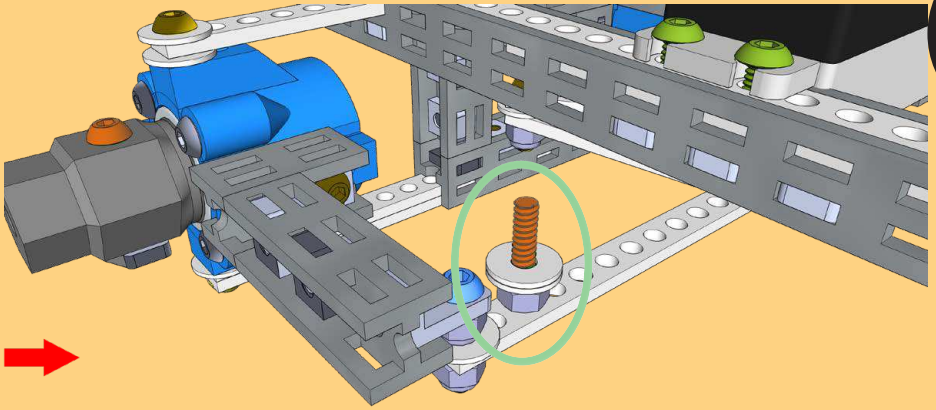

3

1x

Lock Nut M3

2x

Metal washer M3
9x0.8mm

Use the Totem
Wrench Socket

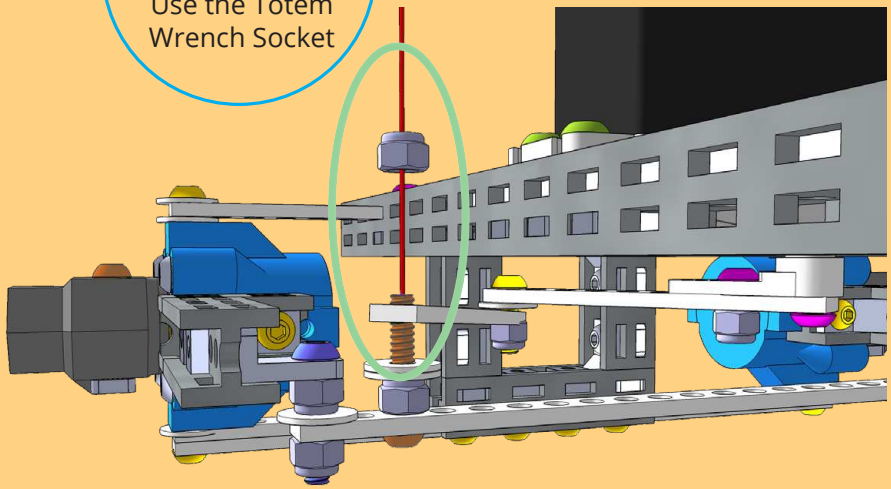

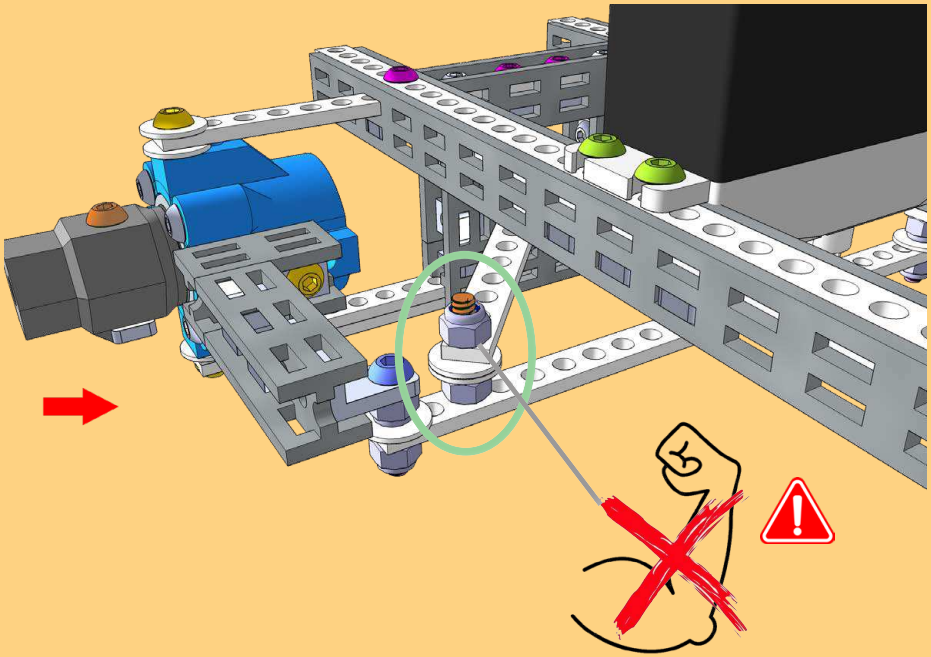

totem

v1.3

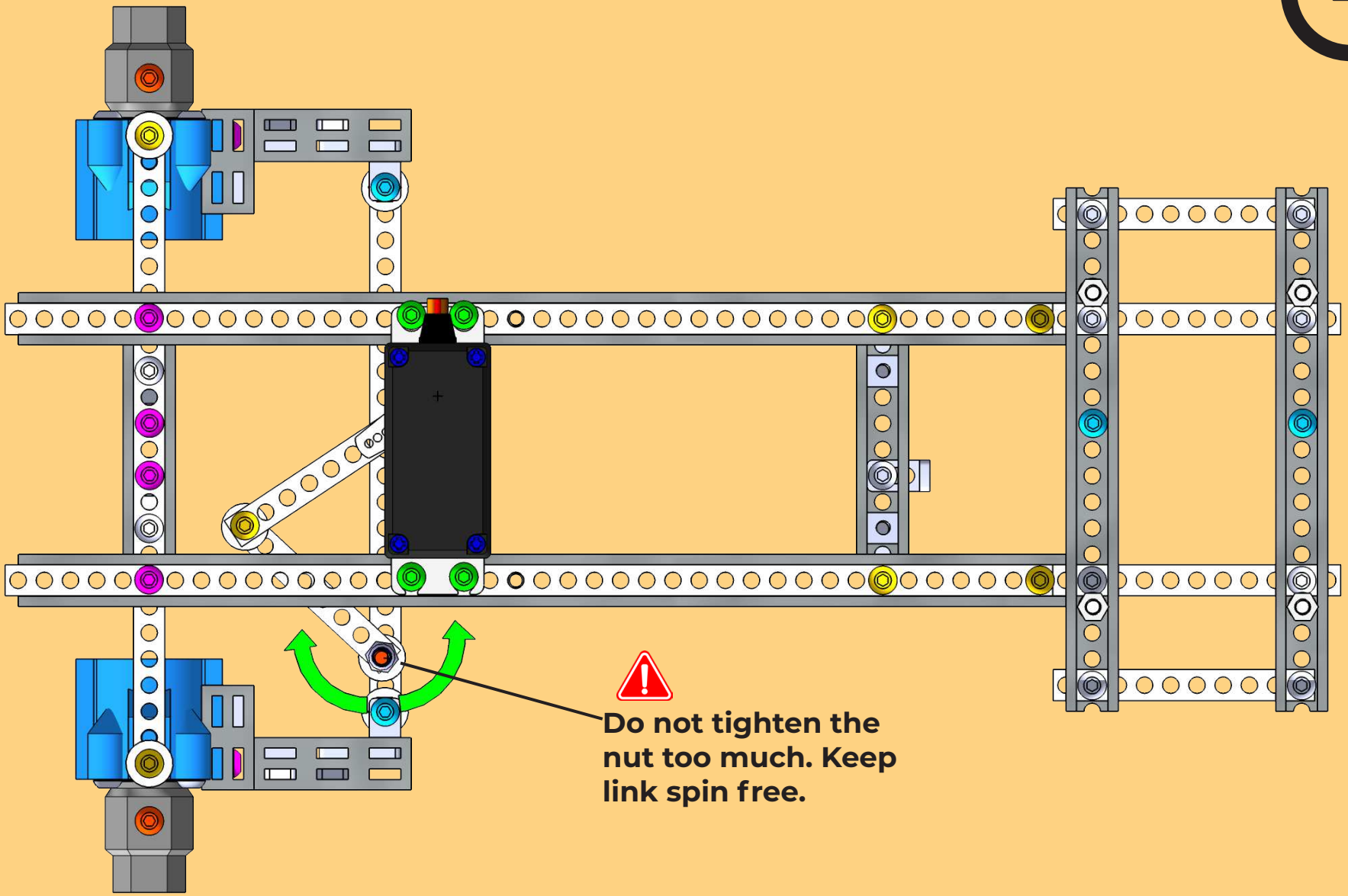

totem

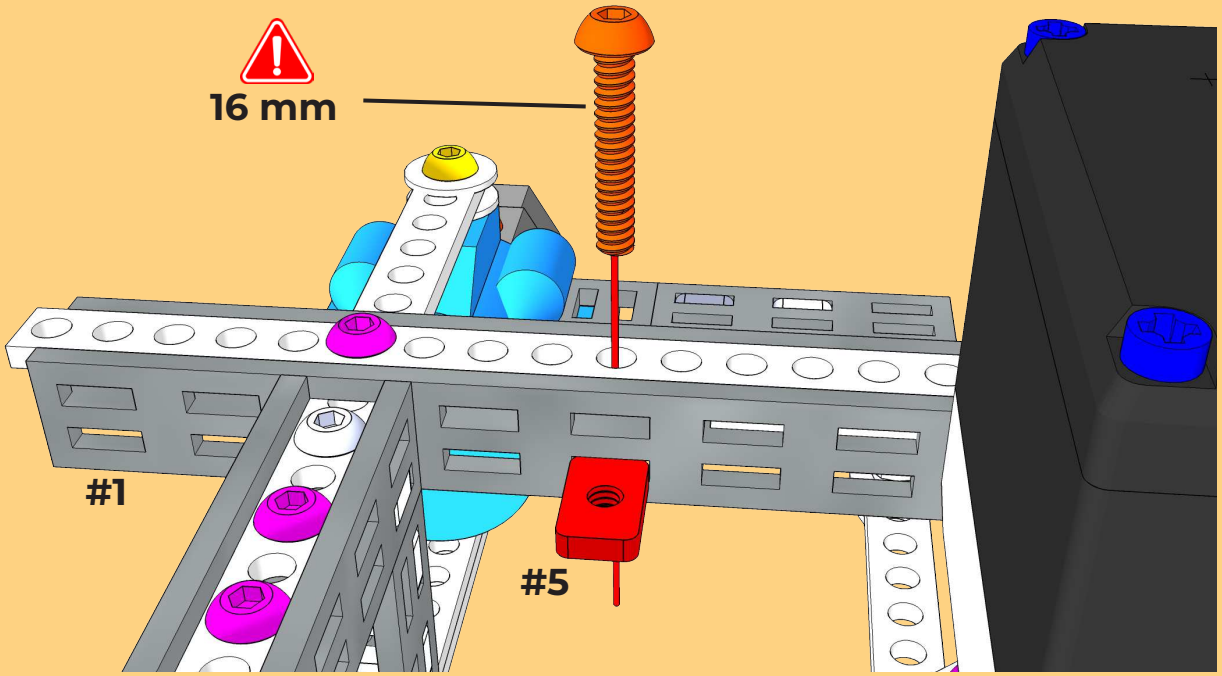

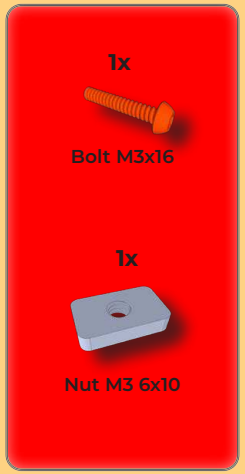

5

The 16 mm bolt has the function to stop over-turn when maximum right-turn.

If the car bumps into something, when maximum right-turning, the steering can “snap” into a locked position.

The bolt stops steering arm before this can happen.

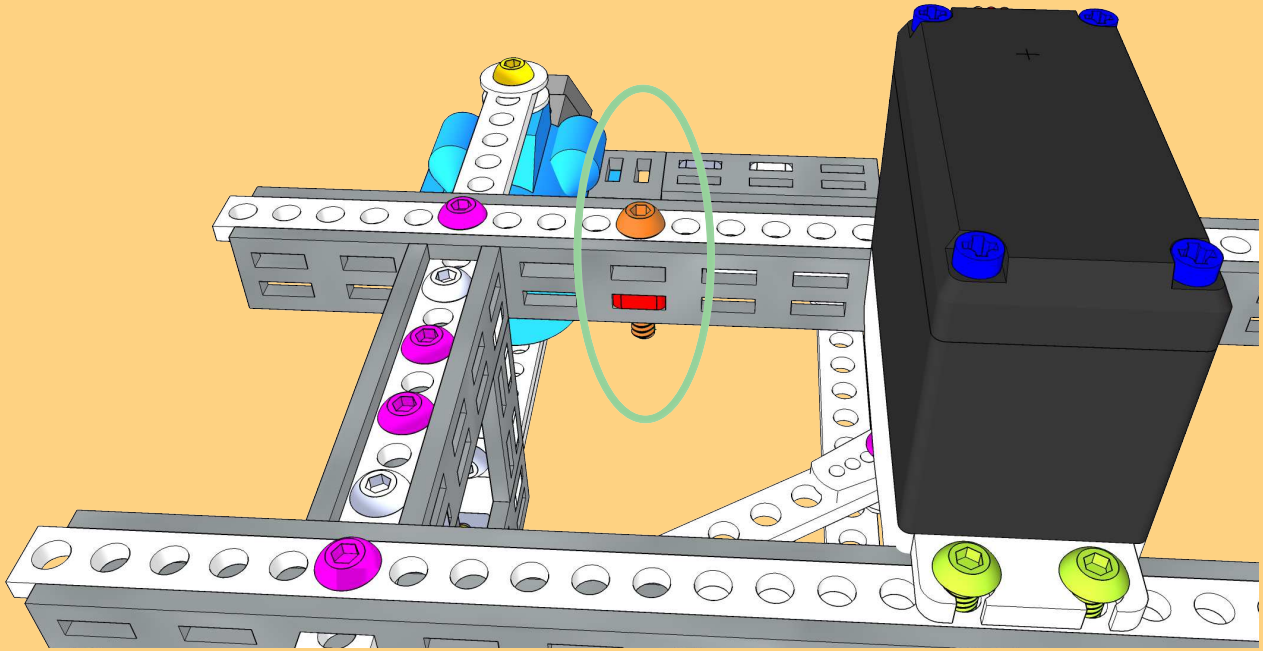

totem

v1.3

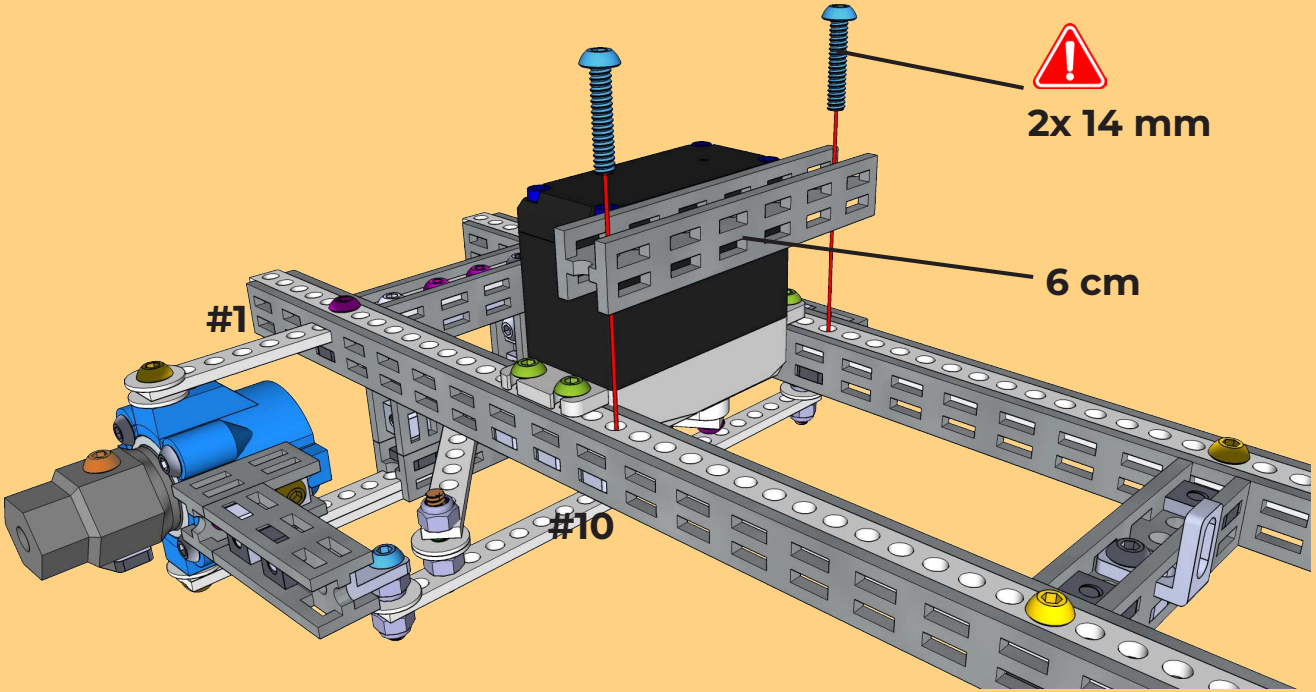

PART 8

6 cm	1x

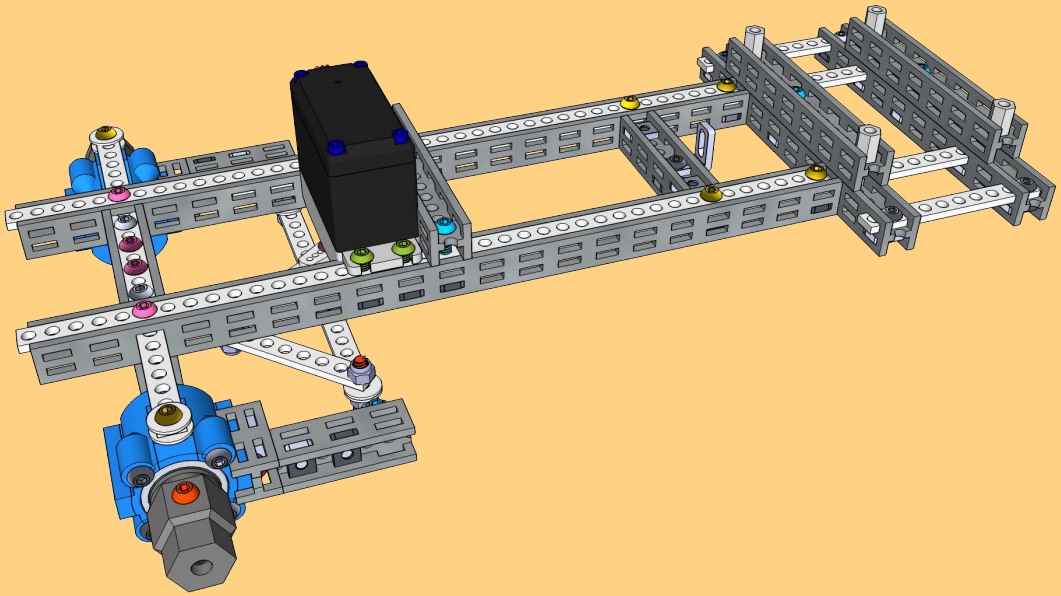

totem

PART 9

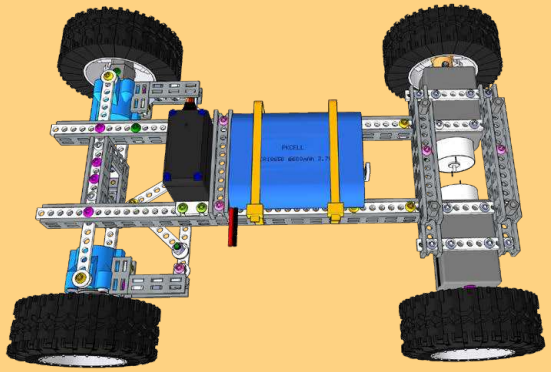

4x Bolt M3x8	8x Bolt M3x6	4x M4 Set-screw	4x M4 Bolt for wheel
2x 25mm Motor Bracket	2x 25mm DC-motor	2x 4mm shaft to HEX 12mm wheel coupler	
1x 11.2v Li-Ion Battery Pack	2x 20 cm ZIP TIE	4x 77mm Wheel	

totem

2x 25mm Motor Bracket
2x 25mm DC-motor geared
4x Bolt M3x8
4x M4 Set-screw
2x 4mm shaft to HEX 12mm wheel coupler

1

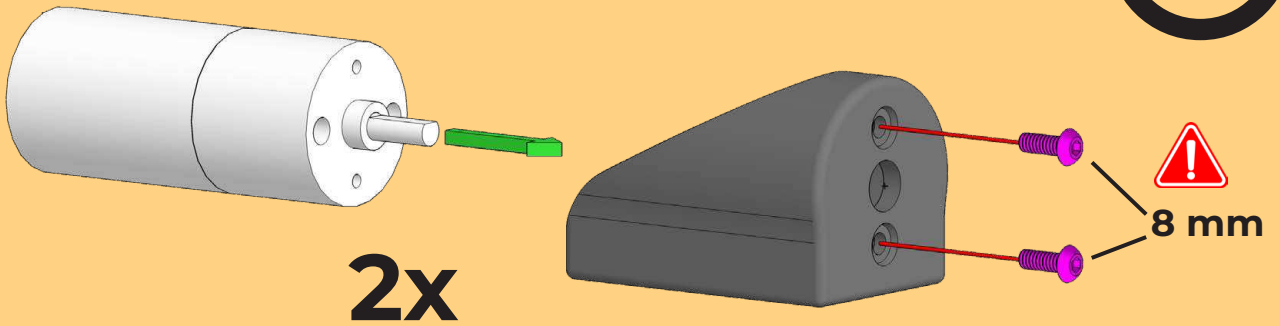

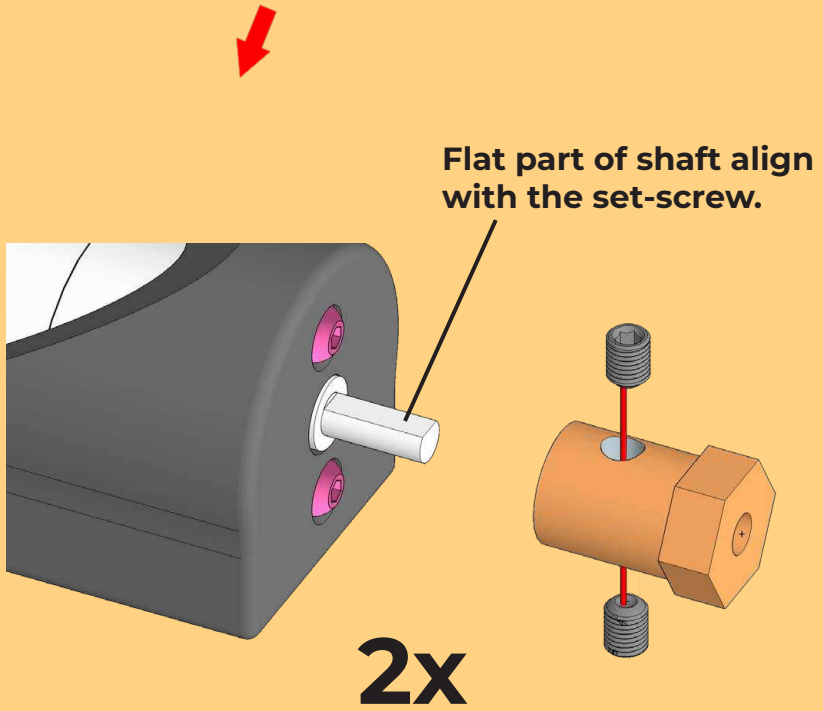

v1.3

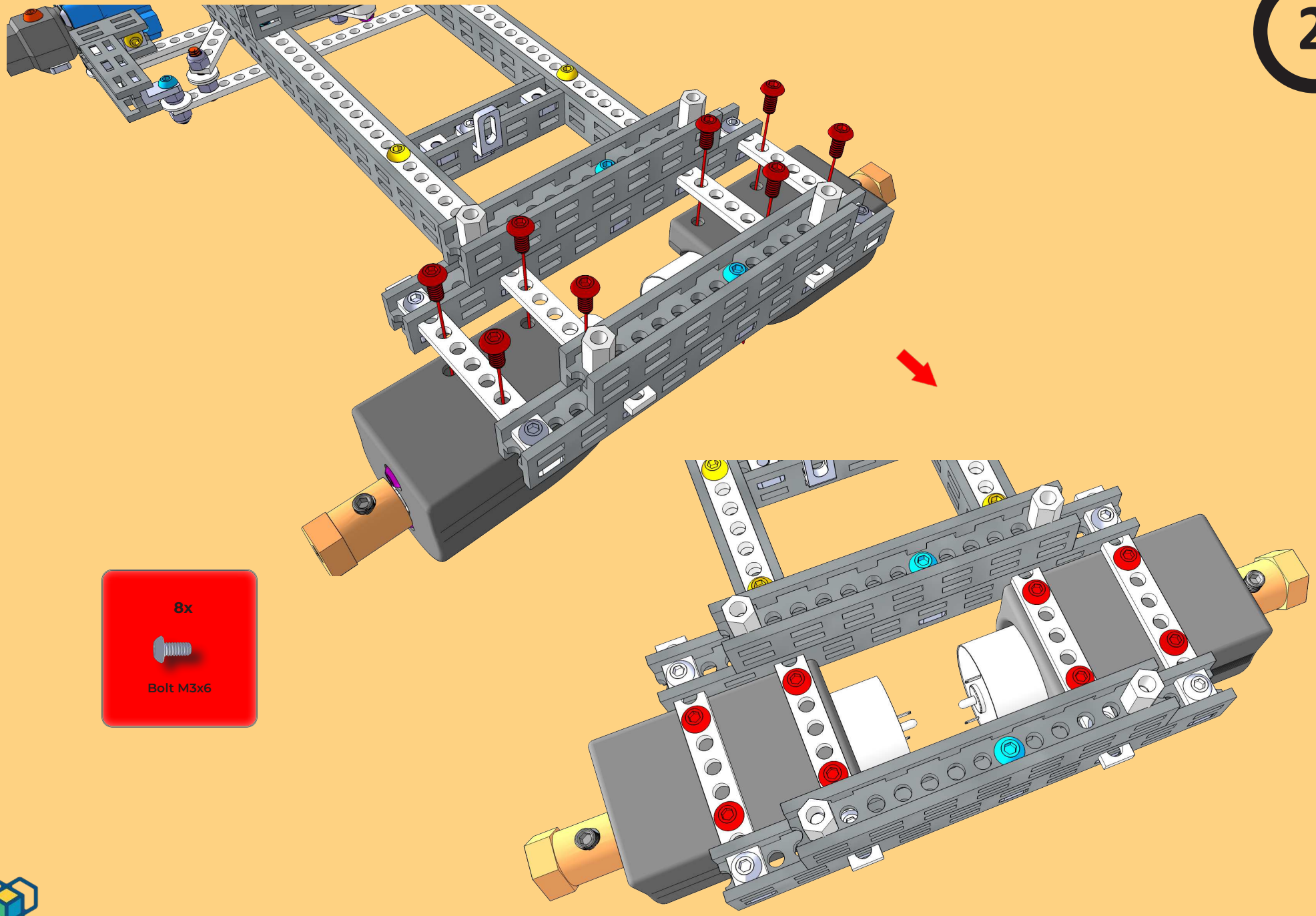

8x

Bolt M3x6

totem

1x

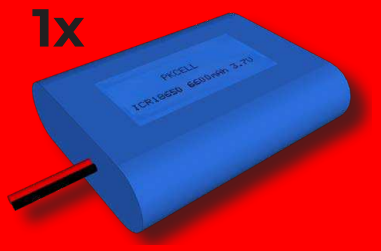

3x18650 Li-ion pack.

2x

Zip Tie 20 cm

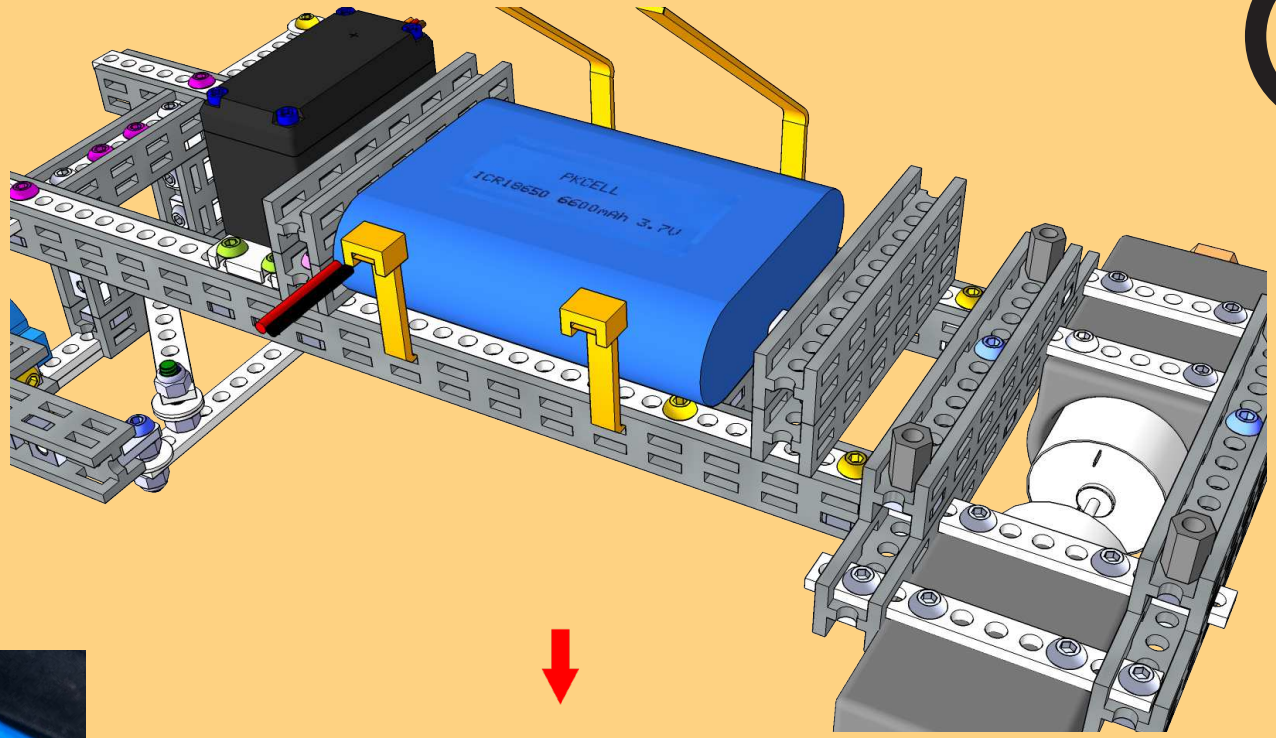

OPTIONAL:

You may put the battery cables behind the Zip-Ties that holds the battery.

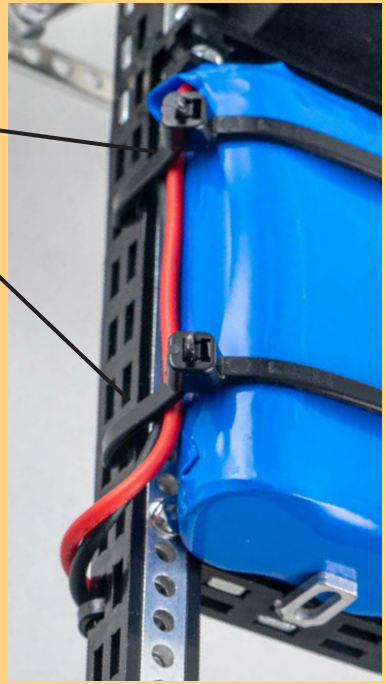

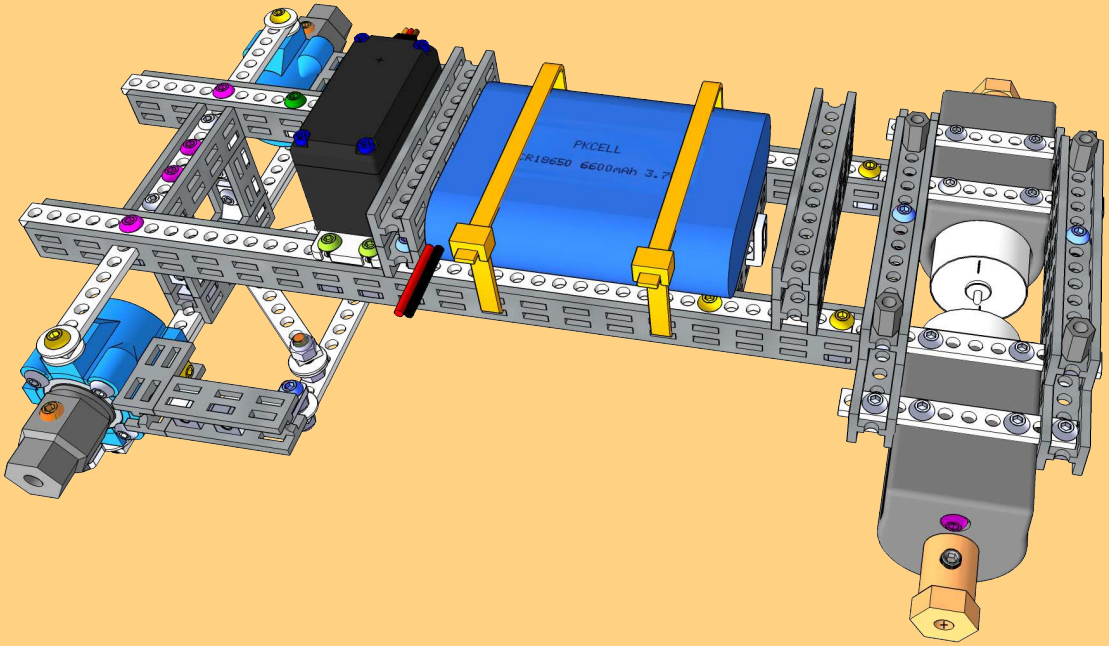

totem

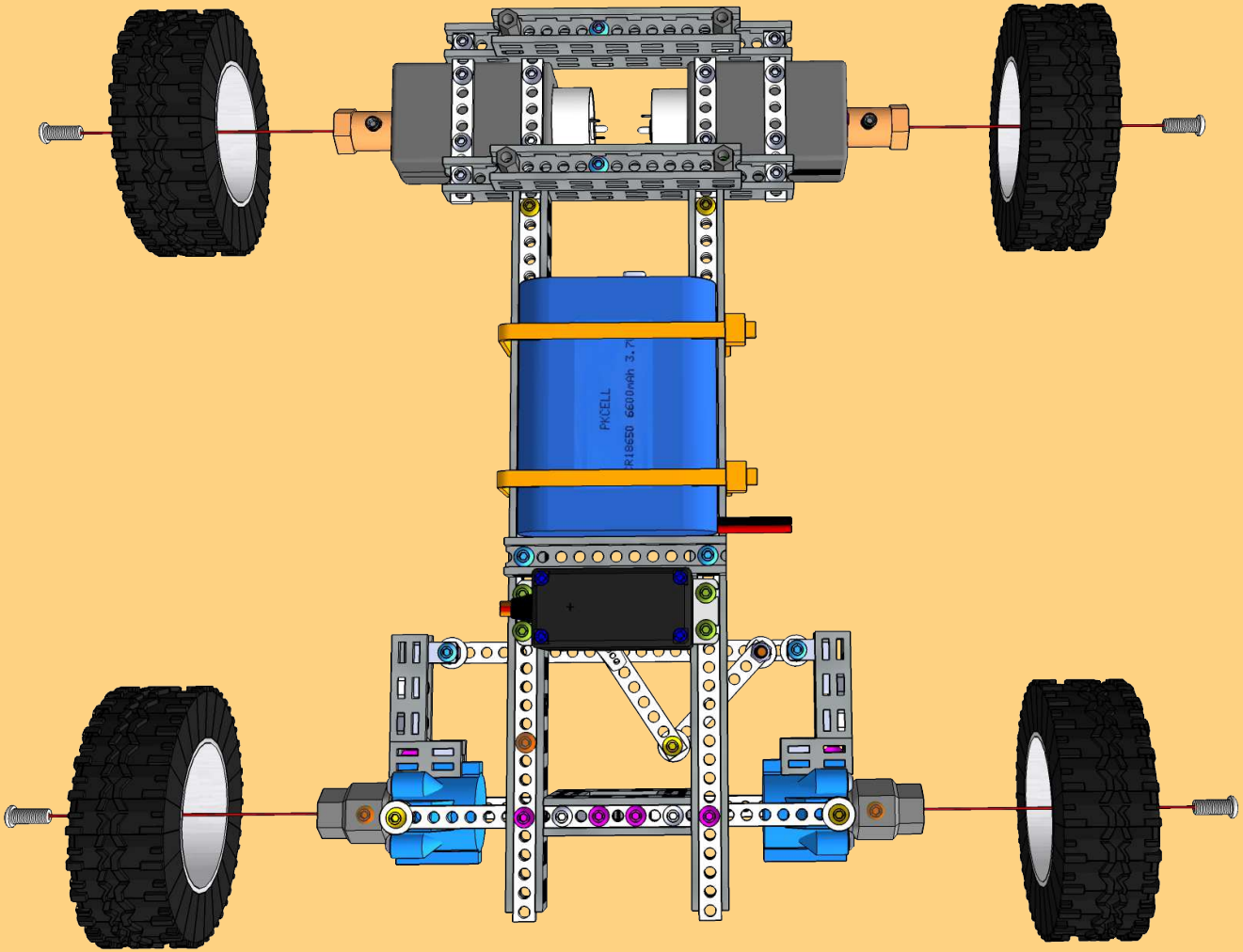

Mount the wheels.

The wheels fit into the 12mm HEX couplers in the front and back. The included M4 (4mm) bolts are used for this purpose. Use any suitable screwdriver. (e.g. Philips drive or flat-type)

totem

Tyre patterns

The wheels are in pairs. You can see on the picture which side either the left or right pattern goes.

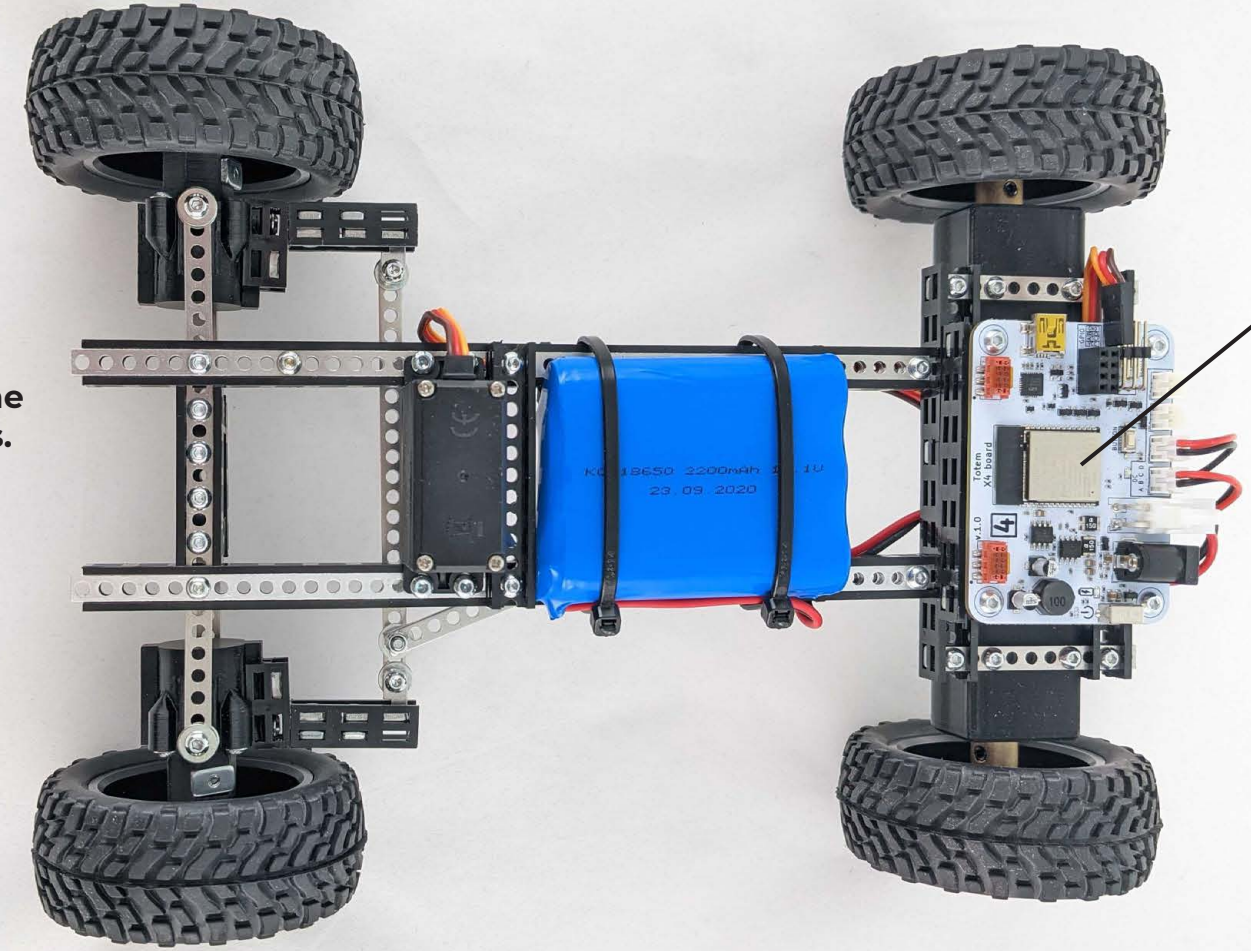

(On this image the X4 board is mounted already. This comes actually in the next PART 10.)

PART 9

totem

PART 10

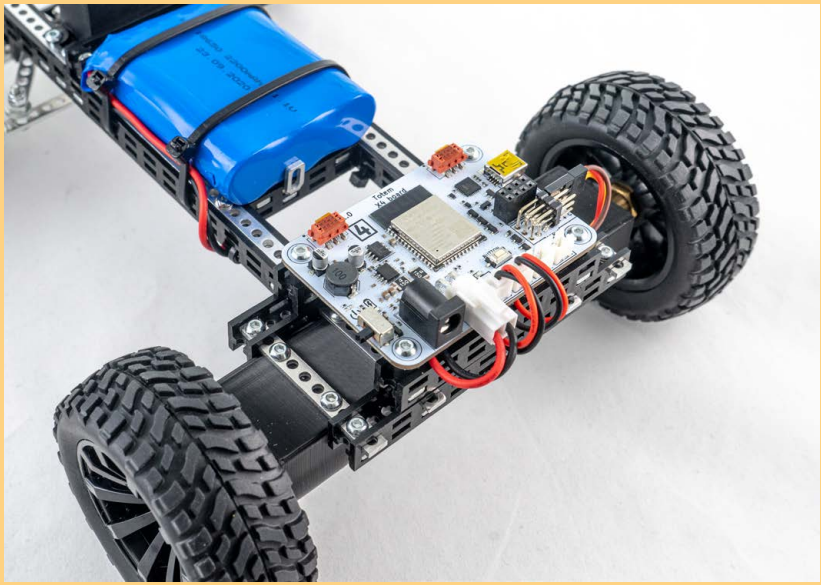

4x

Bolt M3x6

1x

X4 Totem controller

3-6x

10 cm ZIP TIE

totem

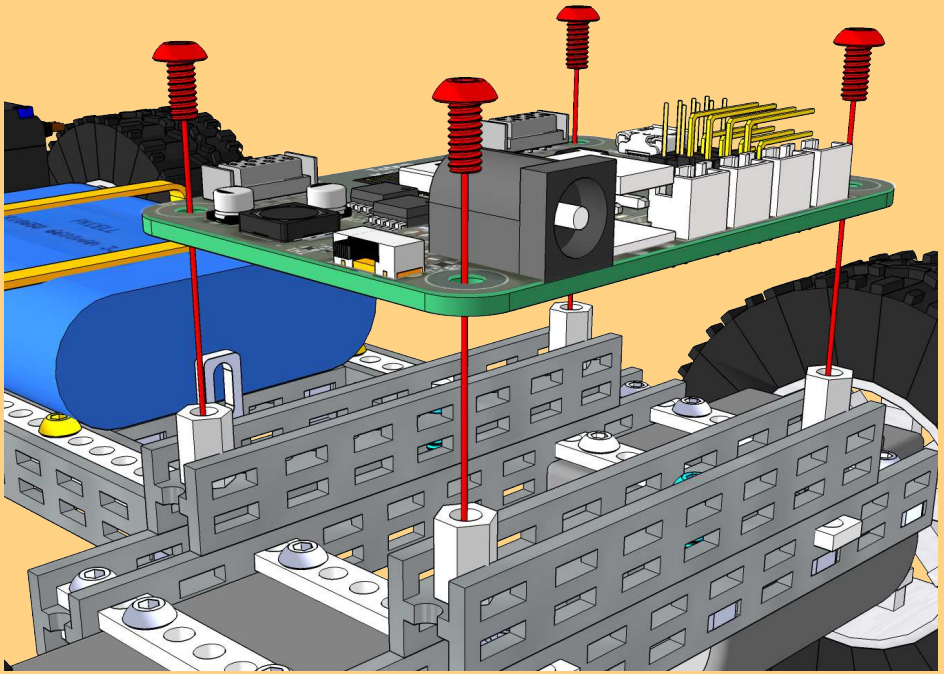

1

4x

Bolt M3x6

1x

X4 Totem controller

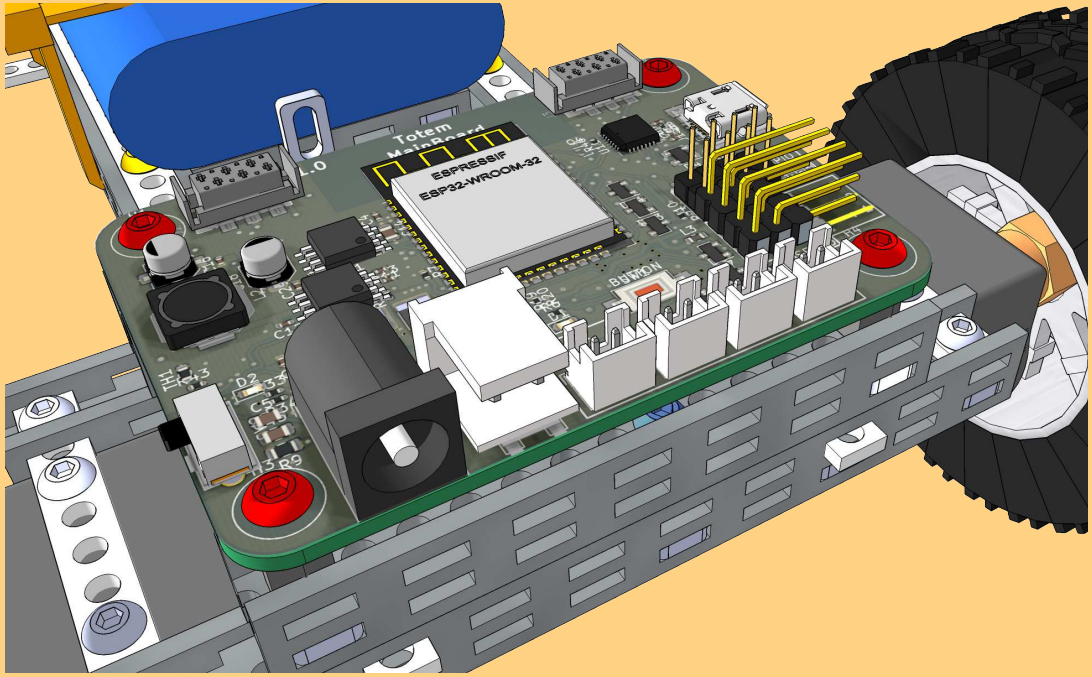

v1.3

CONNECTION DIAGRAM

2

This diagram shows the connections for the cables to the RoboBoard X4 controller.

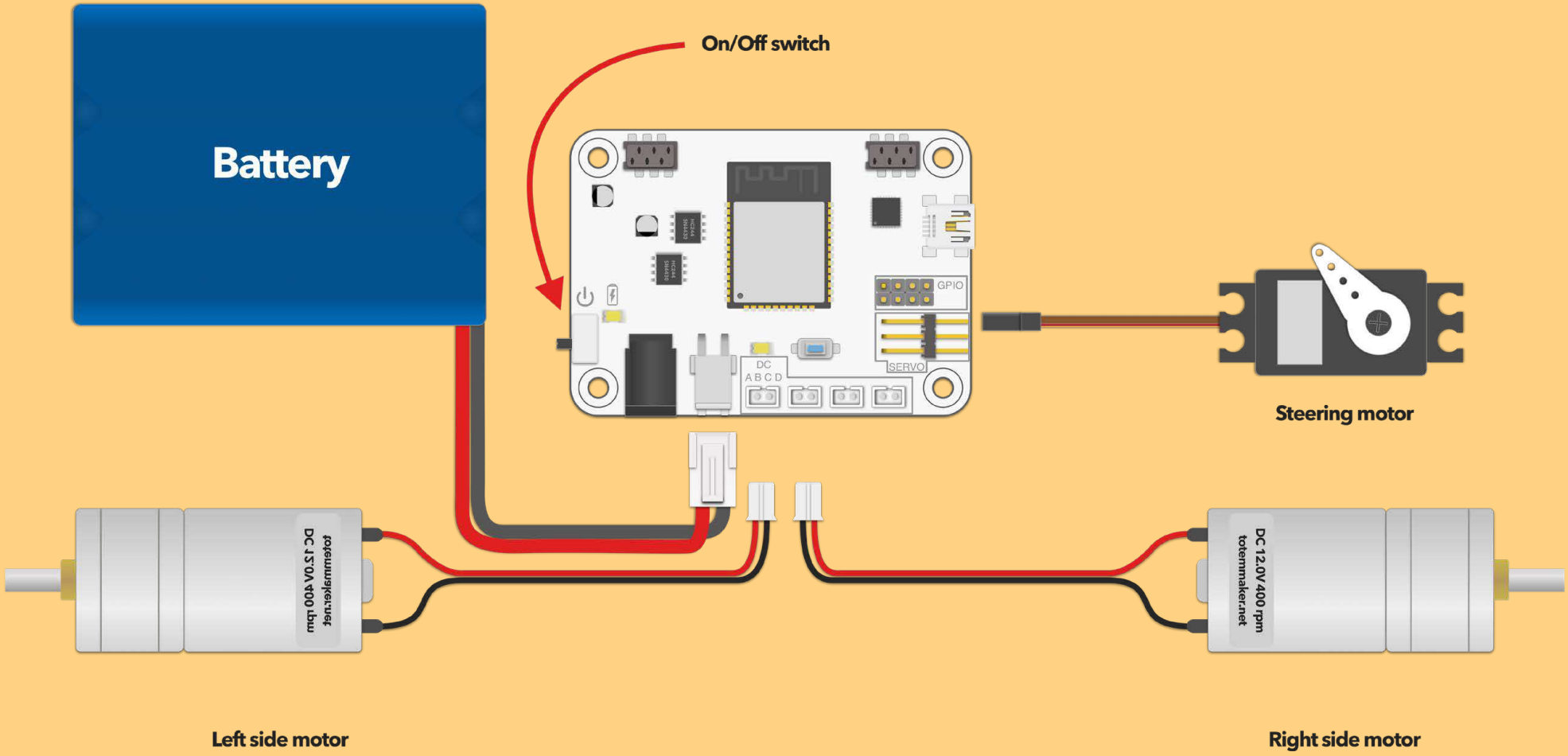

totem

v1.3

Zip Ties for the cables.

There is several ways you may fix the cables with Zip Ties. Here is how we did it.

3

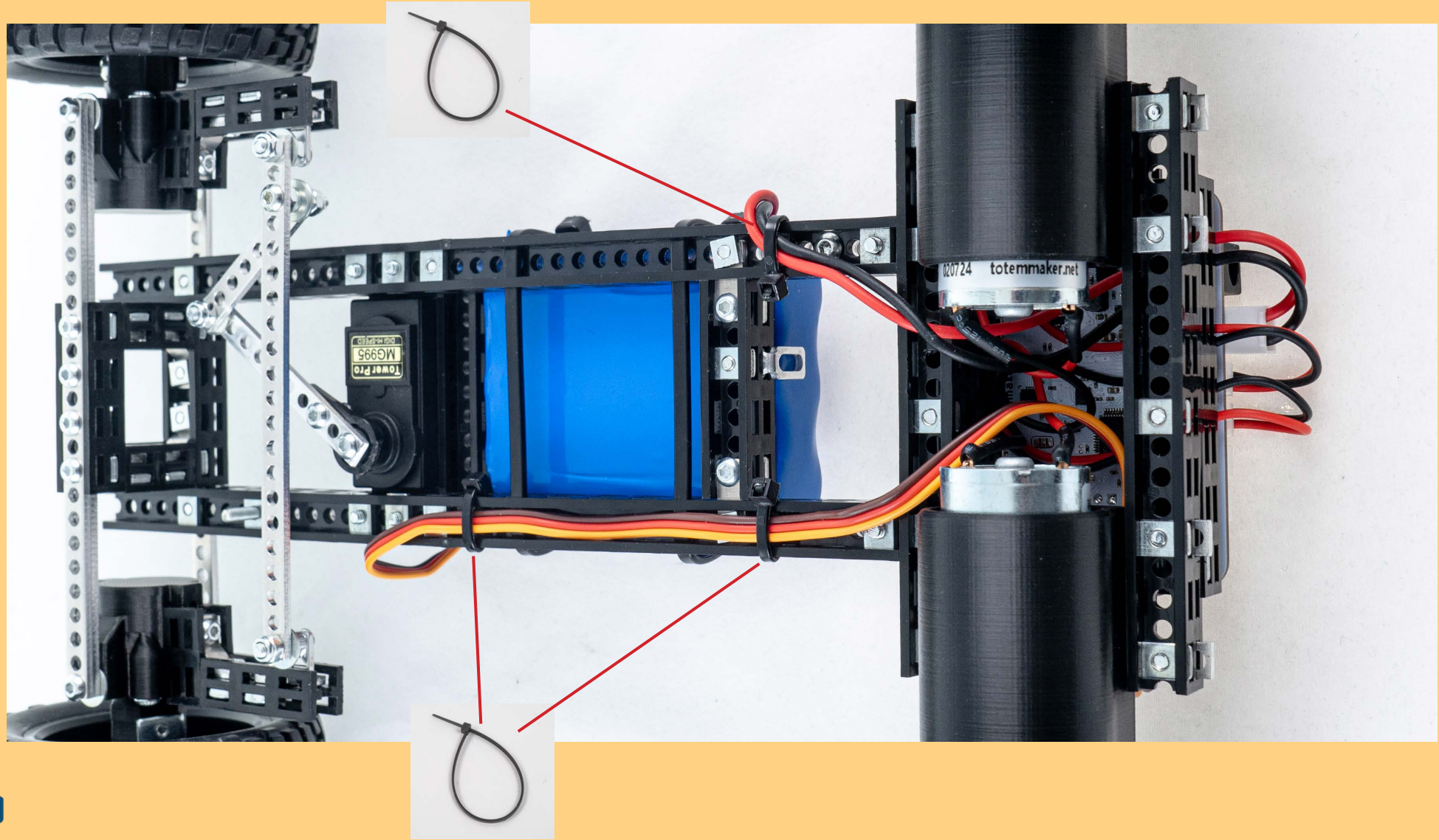

totem

Cables connected to the RoboBoard X4

4

The cables can be thread UNDER the X4 board, to be most tidy and protected.

from the Steering Servo motor

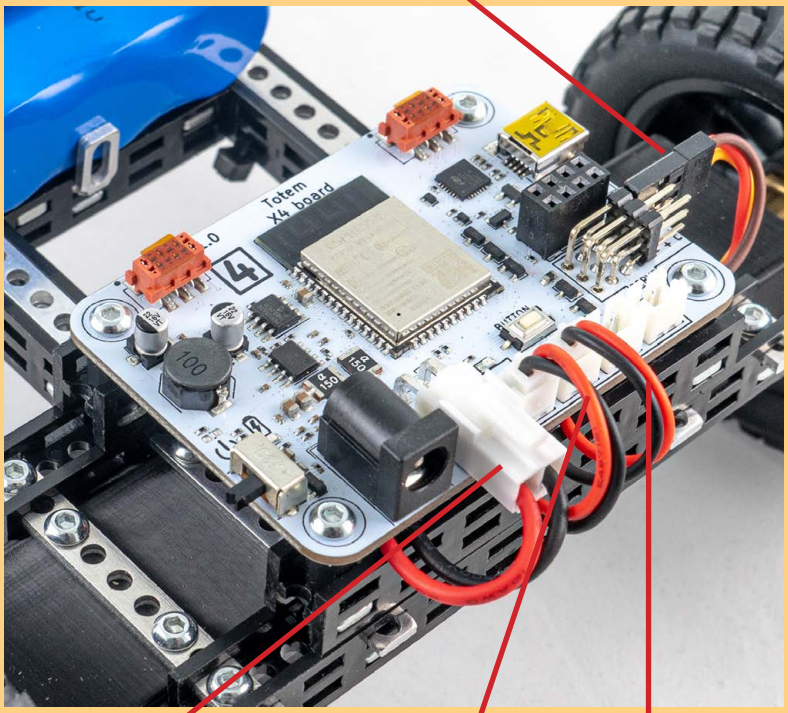

Battery connector. **Motor L** **Motor R**

The cable from the servo is connected to the X4-connector with the BROWN wire facing upward.

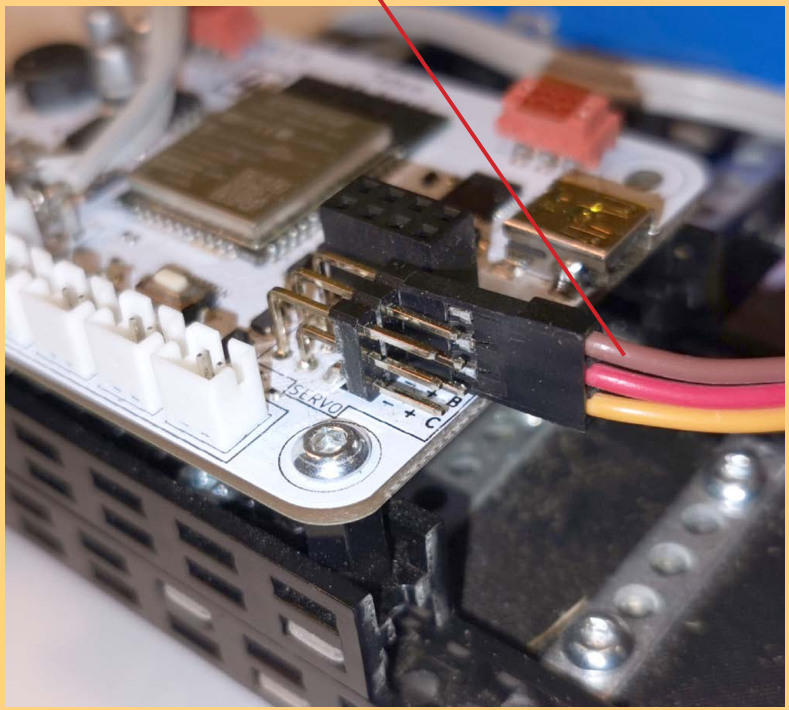

totem

v1.3

CHARGING

5

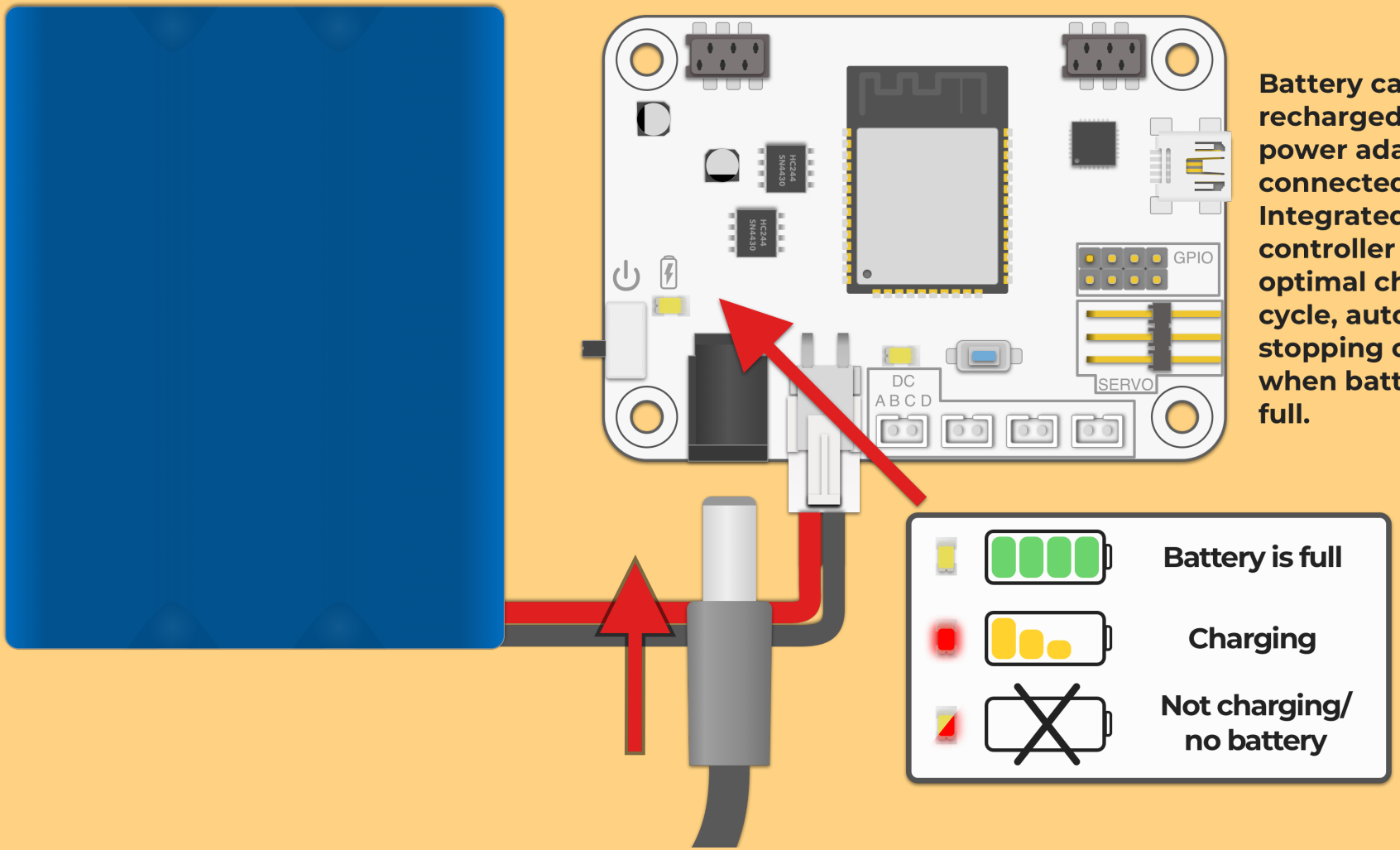

Battery can be recharged any time power adapter is connected. Integrated charge controller ensures optimal charge cycle, automatically stopping charging when battery gets full.

totem

v1.3

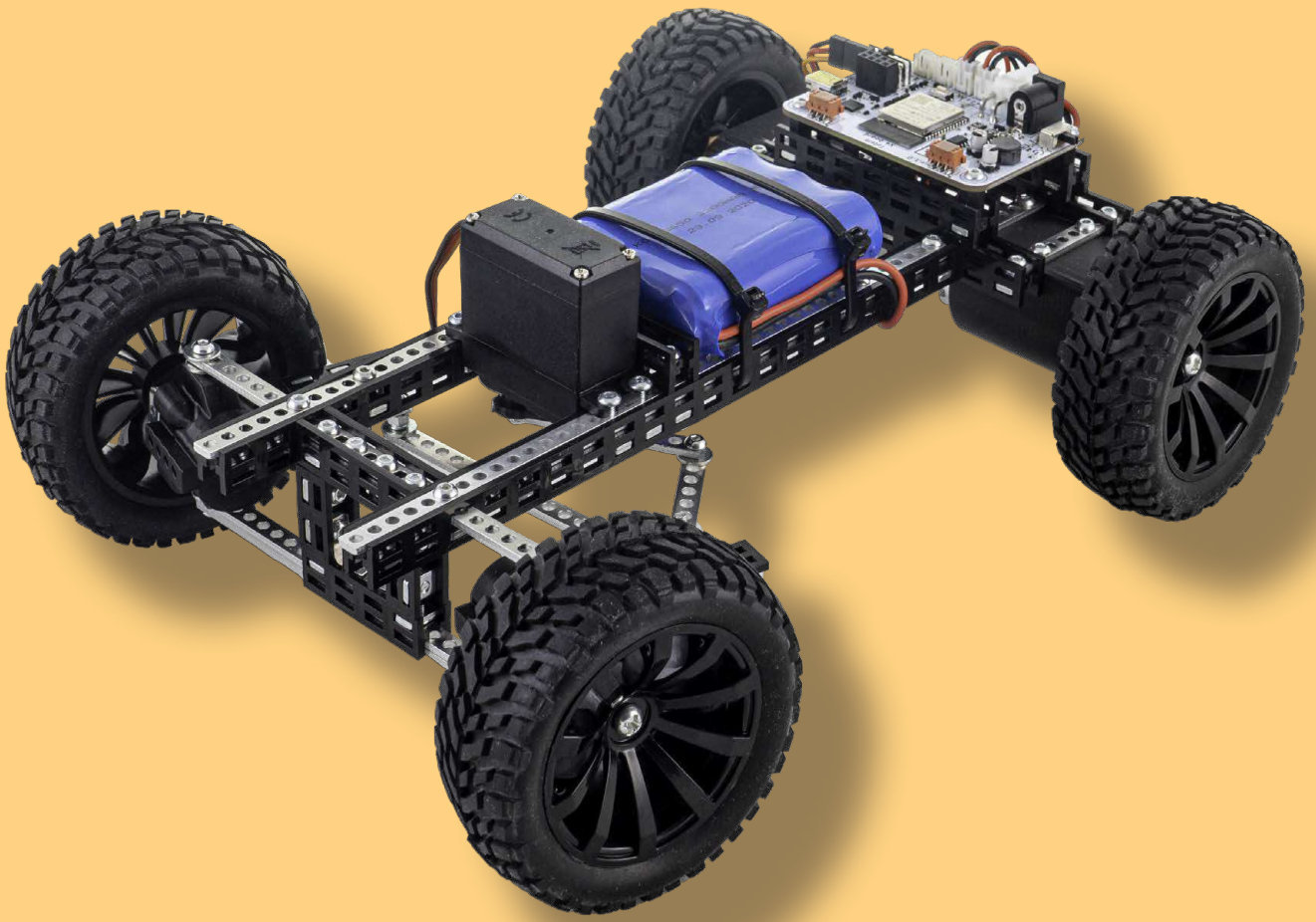

Building is finished !

Now it is time to test your model.

totem

How to control

Download the Totem app on your smartphone or tablet via App Store or Google Play.

Download on the App Store

GET IT ON Google Play

Search for : “totemmaker”

Or scan this code:

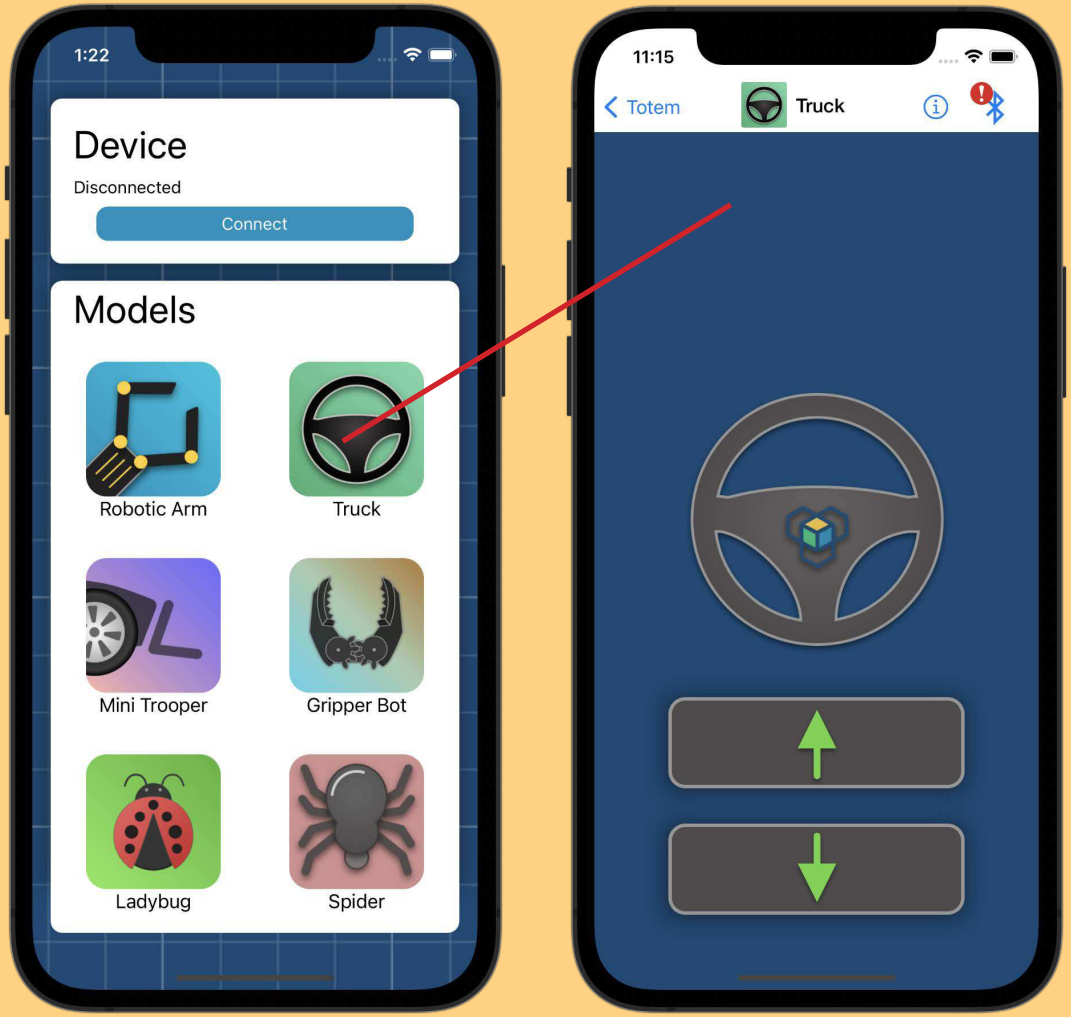

Start the app and get aquinted with it.

totem

v1.3

Coding the RoboBoard

For more advanced use cases, such as programming your model, please follow our documentation and examples available at:

totem https://docs.totemmaker.net

By programming your robot with Arduino, you can teach it to behave in certain patterns, respond to commands or external stimulus.

Our programming examples start from simple behaviour such as robot driving directions and light patterns, up to advanced projects where the robot is subjected to advanced control algorithm such as balance control.

Empty | Arduino 1.8.13

Empty §

```
/*
 * Copyright (c) 2021 TotemMaker. All rights reserved.
 *
 * This work is licensed under the terms of the MIT license.
 * For a copy, see <https://opensource.org/licenses/MIT>.
 */
/* DESCRIPTION:
 * Minimal code required to upload program to X4.
 * This code is handy if you need to update X4 firmware
 * or upload empty program to not interfere with controlling
 * over Bluetooth.
 *
 * INSTRUCTIONS:
 * 1. Connect X4 board to PC.
 * 2. Upload code.
 */
// Totem Library include
#include <Totem.h>
// Arduino setup function.
void setup() {
    // Initialize X4 module
    Totem.X4.begin();
}
// Arduino loop function
void loop() {
    // Do nothing
    delay(1000);
}
```

Done uploading.

13 ESP32 Dev Module on /dev/cu.usbserial-1430

totem

Going further

Your robot abilities can be expanded by adding more Totem Bus devices. The list of available modules are ever-growing.

Robots can have audio playback recording. Laser distance measuring. Line follower for detecting taped lines on the floor. There are display modules and input devices of different kinds.

Learn about the Totem Bus here:

totem **https://docs.totemmaker.net/TotemBUS/**

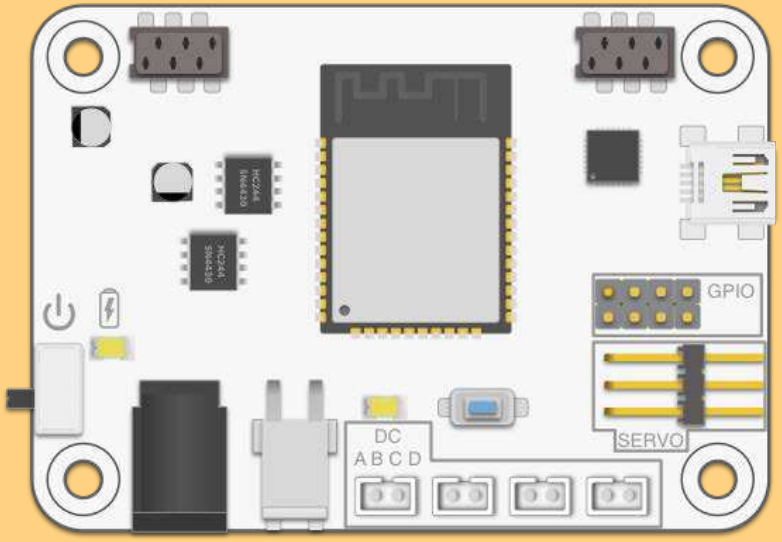

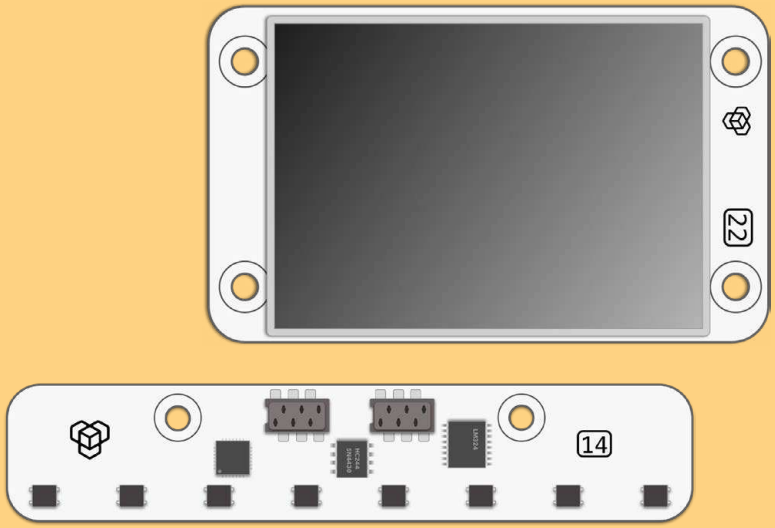

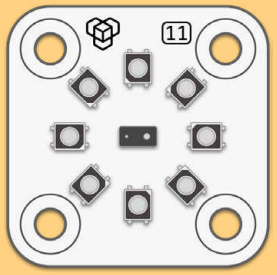

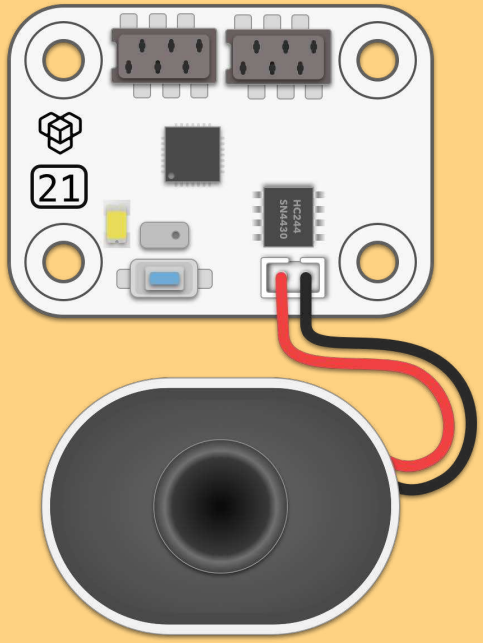

totem

v1.3

totem

See us here:
www.totemmaker.net

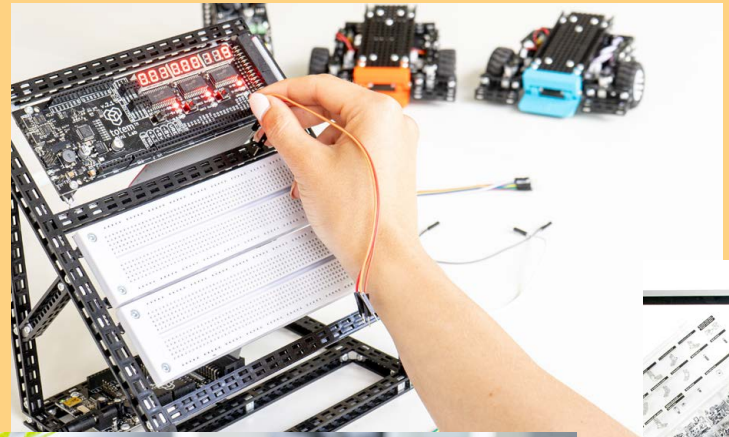

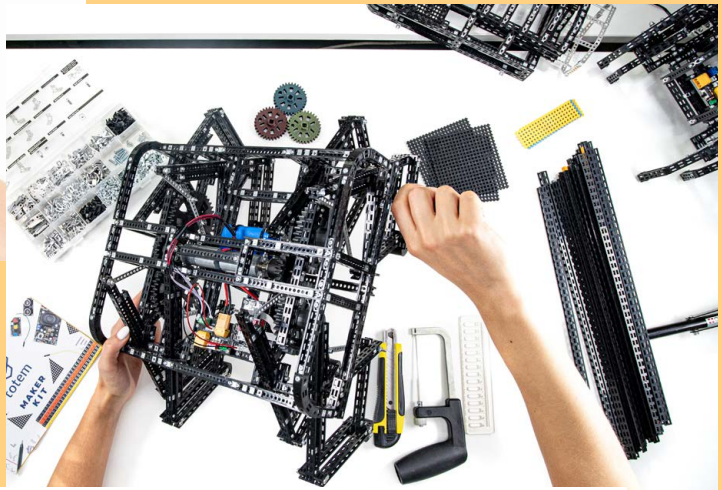

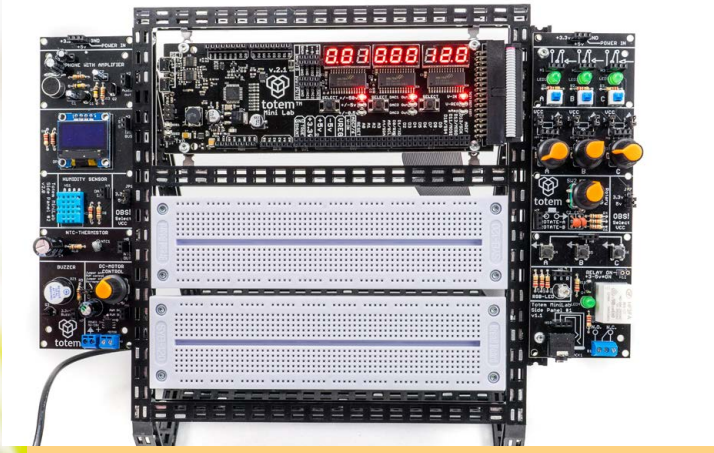

At Totem we create a unique construction system with parts for robotics and electronics prototyping.

It's designed as a user-friendly system for makers of all levels. Since 2015 we seek to make the engineering world fun, understandable and simple for everyone.

totem

v1.3